SUPPLEMENTARY FILE

In this supplementary file, Section S.I gives the proofs of the theoretical results and provides some illustrative examples; Section S.II introduces the resource- limit pair (RP) detection algorithm; Section S.III provides the critical set of RPs (CRP) detection algorithm; Section S.IV presents the partial deadlock detection algorithm; Section S.V presents all CRPs and partial deadlocks of the S^4PR in Fig. 5 of the paper; Section S.VI conducts comparative experiments against the RG-based method to evaluate the performance of the proposed approach; and Section S.VII includes an example that demonstrates how the detection results establish a foundation for the design of optimal controllers.

S.I. PROOFS OF THEORETICAL RESULTS AND EXAMPLES

In this section, we prove all theoretical results and provide some illustrative examples.

Proof of Property 1:

In an S^4PR, since $\mathcal{N}_i=(\{p_{0i}\}\cup P_{Ai}, T_i, F_i, W_i, M_{0i})$ is a strongly connected state machine, $\forall t_i\in T_i$:

$$|{}^\bullet t_i\cap(P_{Ai}\cup\{p_{0i}\})|=|t_i{}^\bullet\cap(P_{Ai}\cup\{p_{0i}\})|=1.$$

According to Definition 5, $\forall t\in T$:

$$|{}^\bullet t\cap(P_A\cup\{p_0\})|=|t^\bullet\cap(P_A\cup\{p_0\})|=1,$$

i.e.,

$$|{}^\bullet t\cap P_A|\le 1 \text{ and } |t^\bullet\cap P_A|\le 1. \quad ■$$

Proof of Property 2:

$\forall M\in R(M_0)$, $A^TX=M-M_0$. Hence, $(A^TX)^T\pi_r=(M-M_0)^T\pi_r$, i.e.,

$$X^T(A\pi_r)=(M-M_0)^T\pi_r.$$

By $A\pi_r=\mathbf{0}$,

$$(M-M_0)^T\pi_r=0,$$

i.e.,

$$M^T\pi_r=M_0{}^T\pi_r.$$

Thus,

$$\Sigma_{p\in\|\pi_r\|}(M(p)\pi_r(p))=\Sigma_{p\in\|\pi_r\|}(M_0(p)\pi_r(p)),$$

i.e.,

$$\Sigma_{p\in\|\pi_r\|}(M(p)\pi_r(p))=M_0(r)\pi_r(r)+\Sigma_{p'\in\Pi_r}(M_0(p')\pi_r(p')).$$

Since $\Pi_r\subseteq P_A$ and $\forall p_i\in P_A$: $M_0(p_i)=0$,

$$\Sigma_{p'\in\Pi_r}(M_0(p')\pi_r(p'))=0.$$

Hence,

$$\Sigma_{p\in\|\pi_r\|}(M(p)\pi_r(p))=M_0(r)\pi_r(r).$$

Since $\pi_r(r)=1$,

$$\Sigma_{p\in\|\pi_r\|}(M(p)\pi_r(p))=M_0(r). \quad ■$$

Proof of Lemma 1:

Suppose that $p\notin P_c$. According to Definition 7, $\exists\, t\in p^\bullet$: $\forall\, r\in P_R$ and $r\notin{}^\bullet t$, i.e., ${}^\bullet t\cap P_R=\varnothing$. Since $p\in P_M$, $p\in P_A$ and $M(p)\neq 0$. According to Property 1, $|{}^\bullet t\cap(P_A\cup P_0)|=1$. By $t\in p^\bullet$ and $p\in P_A$, we obtain that ${}^\bullet t=\{p\}$. Since $M(p)\neq 0$, t is enabled at M. Hence, $p\in P_c$. ■

Proof of Lemma 2:

Since M is a partial deadlock, according to Definition 6, $\forall p\in P_M$ and $\forall t\in p^\bullet$ such that t is not enabled at $\forall M'\in R(M)$. According to Lemma 1, $p\in P_c$. ■

Proof of Theorem 1:

Sufficiency:

If $\exists r^w\in R_{i,j}$: $M(r)\le w$, according to Definition 8, $\exists r\in{}^\bullet t_j\cap P_R$: $M(r)\le W(r, t_j)$-1, i.e., $M(r)<W(r, t_j)$. Hence, t_j is not enabled at M.

Necessity:

By $p_i\in P_M$ and $P_M=\{p|\ p\in P_A, M(p)\neq 0\}$, we have that $p_i\in P_A$ and $M(p_i)\neq 0$. By $|{}^\bullet t_j\cap(P_A\cup P_0)|=1$, $p_i\in{}^\bullet t_j$, and $p_i\in P_A$, we derive that ${}^\bullet t_j\cap P_0=\varnothing$. Since $M(p_i)\neq 0$ and t_j is not enabled at M, $\exists r\in P_R$: $r\in{}^\bullet t_j$ and $M(r)<W(r, t_j)$, i.e.,

$$r\in P_R\cap{}^\bullet t_j \text{ and } M(r)\le W(r, t_j)\text{-}1.$$

Since $p_i\in P_M$, according to Corollary 1, $p_i\in P_c$. According to Definition 8, $R_{i,j}=\{r^w|\ r\in{}^\bullet t_j\cap P_R, w=W(r, t_j)\text{-}1\}$. Hence, $\exists r^w\in R_{i,j}$: $M(r)\le w$. ■

Proof of Corollary 2:

According to Theorem 1, it can be easily proved. ■

Proof of Theorem 2:

Sufficiency:

If $\omega_{i\text{-}a}=<P_{Ri}, L_{i\text{-}a}>$ is an RP of p_i, according to Definitions 8 and 9,

$$L_{i\text{-}a}\subseteq\cup_{j\in J}R_{i,j} \text{ and } R_{i,j}=\{r^y|\ r'\in{}^\bullet t_j\cap P_R, y=W(r', t_j)\text{-}1\},$$

where $J=\{j|\ t_j\in p_i^\bullet\}$ and $\forall j\in J$: $|L_{i\text{-}a}\cap R_{i,j}|=1$. Hence, $\forall t_j\in p_i^\bullet$, $\exists r'\in{}^\bullet t_j\cap P_R$: $y=W(r', t_j)$-1 and $r^y\in L_{i\text{-}a}\cap R_{i,j}$. Since $\forall r^w\in L_{i\text{-}a}$: $M(r)\le w$, we have that $M(r')\le y$. Hence, $\forall t_j\in p_i^\bullet$, $\exists r^y\in R_{i,j}$: $M(r')\le y$. According to Theorem 1, t_j is not enabled at M.

Necessity:

Since $\forall t_j\in p_i^\bullet$ is not enabled at M, according to Theorem 1, $\exists r^w\in R_{i,j}$: $M(r)\le w$. Since $J=\{j|\ t_j\in p_i^\bullet\}$, $\forall j\in J$ satisfies that $\exists r^w\in R_{i,j}$: $M(r)\le w$. Hence, $\exists L_{i\text{-}a}\subseteq\cup_{j\in J}R_{i,j}$ and $|L_{i\text{-}a}\cap R_{i,j}|=1$: $\forall r^w\in L_{i\text{-}a}$, $M(r)\le w$. By $p_i\in P_M$, $p_i\in P_A$. According to Definition 5, $\exists r\in P_R$: $p_i\in\|\pi_r\|$. Thus, there exists $P_{Ri}=\{r'|\ r'\in P_R, p_i\in\|\pi_{r'}\|\}$. According to Definition 9, $\exists\ \omega_{i\text{-}a}=<P_{Ri}, L_{i\text{-}a}>$: $\forall\ r^w\in L_{i\text{-}a}$, $M(r)\le w$. ■

Proof of Corollary 3:

Since M is a partial deadlock, according to Corollary 2, $\forall p_i\in P_M$ and $\forall t_j\in p_i^\bullet$: $\exists r^w\in R_{i,j}$ and $M(r)\le w$. By $J=\{j|\ t_j\in p_i^\bullet\}$, we have that $\forall p_i\in P_M$ and $\forall j\in J$: $\exists r^w\in R_{i,j}$ and $M(r)\le w$. Hence, $\forall p_i\in P_M$, $\exists L_{i\text{-}a}\subseteq\cup_{j\in J}R_{i,j}$ and $|L_{i\text{-}a}\cap R_{i,j}|=1$: $\forall r^w\in L_{i\text{-}a}$, $M(r)\le w$. Since $\exists r\in P_R$: $p_i\in\|\pi_r\|$, there exists $P_{Ri}=\{r'|\ r'\in P_R, p_i\in\|\pi_{r'}\|\}$. According to Definition 9, $\forall\ p_i\in P_M$, $\exists\ \omega_{i\text{-}a}=<P_{Ri}, L_{i\text{-}a}>$: $\forall r^w\in L_{i\text{-}a}$, $M(r)\le w$. ■

Example S1 (Illustrative example for Corollary 3):

For S^4PR in Fig. 2, given initial marking $M_0=15p_1+15p_6+r_1+3r_2+3r_3+2r_4$, $M=13p_1+p_2+p_3+10p_6+2p_7+3p_8+r_2$ is a partial deadlock, where $P_M=\{p_2, p_3, p_7, p_8\}$. From Table II, $\omega_{2\text{-}2}=<P_{R2}, L_{2\text{-}2}>=<\{r_1\}, \{r_2^1, r_3^1\}>$. By $M(r_2)=1$ and $M(r_3)=0<1$, we have that for $p_2\in P_M$, $\exists\omega_{2\text{-}2}$: $\forall r^w\in L_{2\text{-}2}$, $M(r)\le w$. Since $\omega_{3\text{-}1}=<P_{R3}, L_{3\text{-}1}>=<\{r_2\}, \{r_4^0\}>$ and $M(r_4)=0$, we have that for $p_3\in P_M$, $\exists\omega_{3\text{-}1}$: $\forall r^w\in L_{3\text{-}1}$, $M(r)\le w$. Similarly, for p_7, $p_8\in P_M$, $\exists\omega_{7\text{-}1}$: $\forall r^w\in L_{7\text{-}1}$, $M(r)\le w$ and $\exists\omega_{8\text{-}1}$: $\forall r^w\in L_{8\text{-}1}$, $M(r)\le w$. Hence, $\forall p_i\in P_M$, $\exists\omega_i=<P_{Ri}, L_i>$: $\forall r^w\in L_i$, $M(r)\le w$.

Proof of Corollary 4:

According to Corollary 3, it can be easily proved. ■

Proof of Theorem 3:

Sufficiency:

Suppose that $\hat{\Omega}$ is a CRP at M. According to Definition 10, $\forall p_i \in P_M$, $\exists \omega_{i\text{-}a}=<P_{Ri}, L_{i\text{-}a}>$: $\forall r^w \in L_{i\text{-}a}$, $M(r)\leq w$. According to Theorem 2, $\forall t_j \in p_i^{\bullet}$ is not enabled at M. Hence, $\forall t' \in T$, if $M[t'\rangle M'$, there are two cases.

i) When $t' \notin \cup_{p\in\|\pi_r\|}(p^{\bullet} \cup {}^{\bullet}p)$, $\forall p_k \in \Pi_r$: $p_k \notin t'^{\bullet} \cup {}^{\bullet}t'$. Thus,

$$M(p_k)=M'(p_k).$$

ii) When $t' \in \cup_{p\in\|\pi_r\|}(p^{\bullet} \cup {}^{\bullet}p)$, since $\forall p_i \in P_M$ and $\forall t_j \in p_i^{\bullet}$ is not enabled at M, we have that $\forall p_k \in \Pi_r$: $t' \notin p_k^{\bullet}$. By $M[t'\rangle M'$,

$$M'(p_k)\geq M(p_k).$$

Then,

$$\sum_{p\in\Pi_r\cap P_M}(M'(p)\pi_r(p))\geq\sum_{p\in\Pi_r\cap P_M}(M(p)\pi_r(p)). \quad \text{(S1)}$$

According to Property 2,

$$\sum_{p_v\in\|\pi_r\|}(M(p_v)\pi_r(p_v))=\sum_{p_v\in\|\pi_r\|}(M'(p_v)\pi_r(p_v))=M_0(r).$$

Since $\Pi_r=\|\pi_r\|\setminus\{r\}$,

$$M(r)\pi_r(r)+\sum_{p_z\in\Pi_r}(M(p_z)\pi_r(p_z))$$
$$=M'(r)\pi_r(r)+\sum_{p_z\in\Pi_r}(M'(p_z)\pi_r(p_z))=M_0(r).$$

By $\pi_r(r)=1$, we have that:

$$M(r)+\sum_{p_z\in\Pi_r}(M(p_z)\pi_r(p_z))$$
$$=M'(r)+\sum_{p_z\in\Pi_r}(M'(p_z)\pi_r(p_z))=M_0(r).$$

By $\Pi_r=(\Pi_r\cap P_M)\cup(\Pi_r\setminus P_M)$,

$$M(r)+\sum_{p'\in\Pi_r\setminus P_M}(M(p')\pi_r(p'))$$
$$+\sum_{p\in\Pi_r\cap P_M}(M(p)\pi_r(p))=M_0(r) \quad \text{(S2)}$$

and

$$M'(r)+\sum_{p'\in\Pi_r\setminus P_M}(M'(p')\pi_r(p'))$$
$$+\sum_{p\in\Pi_r\cap P_M}(M'(p)\pi_r(p))=M_0(r). \quad \text{(S3)}$$

$\forall p_z \in \Pi_r$, if $p_z \notin P_M$, $M(p_z)=0$. Hence, $\sum_{p'\in\Pi_r\setminus P_M}(M(p')\pi_r(p'))= 0$. By (S2),

$$M(r)+\sum_{p\in\Pi_r\cap P_M}(M(p)\pi_r(p))=M_0(r), \quad \text{(S4)}$$

i.e., $\sum_{p\in\Pi_r\cap P_M}(M(p)\pi_r(p))=M_0(r)-M(r)$. Since $M(r)\leq w$,

$$\sum_{p\in\Pi_r\cap P_M}(M(p)\pi_r(p))\geq M_0(r)-w.$$

By (S1),

$$\sum_{p\in\Pi_r\cap P_M}(M'(p)\pi_r(p))\geq M_0(r)-w. \quad \text{(S5)}$$

By (S3),

$$\sum_{p\in\Pi_r\cap P_M}(M'(p)\pi_r(p))=M_0(r)-\sum_{p'\in\Pi_r\setminus P_M}(M'(p')\pi_r(p'))-M'(r).$$

By (S5), $M_0(r)-\sum_{p'\in\Pi_r\setminus P_M}(M'(p')\pi_r(p'))-M'(r)\geq M_0(r)-w$, i.e.,

$$M'(r)\leq w-\sum_{p'\in\Pi_r\setminus P_M}(M'(p')\pi_r(p')).$$

Since $\sum_{p'\in\Pi_r\setminus P_M}(M'(p')\pi_r(p'))\geq 0$, we have that $M'(r)\leq w$. According to Theorem 2, $\forall t_j \in p_i^{\bullet}$, t_j is not enabled at M'. By analogy, $\forall M'' \in R(M)$, t_j is not enabled at M''. Hence, M is a partial deadlock.

Necessity:

Suppose that M is a partial deadlock. According to Corollary 3, $\forall p_i \in P_M$, $\exists \omega_{i\text{-}a}=<P_{Ri}, L_{i\text{-}a}>$: $\forall r^w \in L_{i\text{-}a}$, $M(r)\leq w$. Let $\hat{\Omega}$ be the set of these $\omega_{i\text{-}a}$. Hence, $P_M=\{p_i|\ \omega_{i\text{-}a} \in \hat{\Omega}\}$, and $\forall p_i \in P_M$, $\exists \omega_{i\text{-}a} \in \hat{\Omega}$: $\forall r^w \in L_{i\text{-}a}$, $M(r)\leq w$. Hence, $\hat{\Omega}$ is a CRP at M. ■

Example S2 (Illustrative example for Theorem 3):

In Fig. 2, $M=13p_1+p_2+p_3+10p_6+2p_7+3p_8+r_2$ is reachable from M_0, where $M_0=15p_1+15p_6+r_1+3r_2+3r_3+2r_4$ and $P_M=\{p_2, p_3, p_7, p_8\}$. According to Example 5, $\tilde{\Omega}=\{\omega_{2\text{-}2}, \omega_{3\text{-}1}, \omega_{4\text{-}1}, \omega_{7\text{-}1}, \omega_{8\text{-}1}\}$. Let $\hat{\Omega}=\{\omega_{2\text{-}2}, \omega_{3\text{-}1}, \omega_{7\text{-}1}, \omega_{8\text{-}1}\}$. Hence, $\{p_i|\ \omega_{i\text{-}a} \in \hat{\Omega}\}=\{p_2, p_3, p_7, p_8\}=P_M$. By $M(r_2)=1$, $M(r_3)=0$, and $\omega_{2\text{-}2}=<P_{R2}, L_{2\text{-}2}>=<\{r_1\}, \{r_2^1, r_3^1\}>$, we have that for $p_2 \in P_M$, $\exists \omega_{2\text{-}2} \in \hat{\Omega}$: $\forall r^w \in L_{2\text{-}2}$, $M(r)\leq w$. By $M(r_4)=0$ and $\omega_{3\text{-}1}=<P_{R3}, L_{3\text{-}1}>=<\{r_2\}, \{r_4^0\}>$, we derive that for $p_3 \in P_M$, $\exists \omega_{3\text{-}1} \in \hat{\Omega}$: $\forall r^w \in L_{3\text{-}1}$, $M(r)\leq w$. By $M(r_3)=0$ and $\omega_{7\text{-}1}=<P_{R7}, L_{7\text{-}1}>=<\{r_4\}, \{r_3^0\}>$, we obtain that for $p_7 \in P_M$, $\exists \omega_{7\text{-}1} \in \hat{\Omega}$: $\forall r^w \in L_{7\text{-}1}$, $M(r)\leq w$. By $M(r_1)=0$ and $\omega_{8\text{-}1}=<P_{R8}, L_{8\text{-}1}>=<\{r_3\}, \{r_1^0\}>$, we have that for $p_8 \in P_M$, $\exists \omega_{8\text{-}1} \in \hat{\Omega}$: $\forall r^w \in L_{8\text{-}1}$, $M(r)\leq w$. Hence, $\hat{\Omega}$ is a CRP at M. According to Theorem 3, M is a partial deadlock.

Proof of Theorem 4:

Since $\hat{\Omega}$ is a CRP at M, according to Definition 10, $P_M=\{p_i|\ \omega_{i\text{-}a} \in \hat{\Omega}\}$. Suppose that $\exists r \in \mathscr{R}$: $r \notin \Phi$. Since

$$\Phi=\{r'|\ r' \in P_{Ri}, \omega_{i\text{-}a} \in \hat{\Omega}, \omega_{i\text{-}a}=<P_{Ri}, L_{i\text{-}a}>\},$$

$\forall \omega_{i\text{-}a} \in \hat{\Omega}$: $r \notin P_{Ri}$, where $\omega_{i\text{-}a}=<P_{Ri}, L_{i\text{-}a}>$ and $P_{Ri}=\{r'|\ r' \in P_R, p_i \in \|\pi_{r'}\|\}$. Hence, $\forall p_i \in \{p_i|\ \omega_{i\text{-}a} \in \hat{\Omega}\}$: $p_i \notin \|\pi_r\|$. By $P_M=\{p_i|\ \omega_{i\text{-}a} \in \hat{\Omega}\}$, we have that $\forall p_i \in P_M$: $p_i \notin \|\pi_r\|$, i.e., $\forall p_j \in \|\pi_r\| \cap P_A$: $M(p_j)=0$. Thus, $\sum_{p_j\in\|\pi_r\|\cap P_A}(M(p_j)\pi_r(p_j))=0$. Since $\pi_r(r)=1$ and

$$M(r)\pi_r(r)+\sum_{p_j\in\|\pi_r\|\cap P_A}(M(p_j)\pi_r(p_j))=M_0(r),$$

we derive that:

$$M(r)=M_0(r).$$

Since $r \in \mathscr{R}$ and $\mathscr{R}=\{r|\ r^w \in L_{i\text{-}a}, \omega_{i\text{-}a} \in \hat{\Omega}, \omega_{i\text{-}a}=<P_{Ri}, L_{i\text{-}a}>\}$, according to Definition 10,

$$M(r)<w.$$

According to Definitions 8 and 9, $w=W(r, t_j)-1$, i.e.,

$$M(r)<W(r, t_j).$$

Since $\forall r' \in P_R$: $M_0(r')\geq \mathrm{Max}\{W(r', t)|\ t \in T, (r', t) \in F\}$, we have that:

$$M_0(r)\geq W(r, t_j).$$

Hence, $M(r)<M_0(r)$. This contradicts that $M(r)=M_0(r)$. Thus, $\forall r \in \mathscr{R}$: $r \in \Phi$. ■

S.II. *RP Detection Algorithm*

In this section, Algorithm S1 is proposed to obtain Ω. Particularly, for any activity place p_i, the method determines whether it is a critical place according to Definition 8 (line 4 of Algorithm S1). If the above is fulfilled, P_{Ri} (line 5) and $L_{i\text{-}a}$ (lines 6-9) are computed according to Definition 10. Given an S^{4}PR, the maximum number of input resource places for transitions is $\hat{n}=\mathrm{Max}(\{x|\ x=|{}^{\bullet}t\cap P_R|, t\in T\})$, and the maximum number of output transitions for activity places is $\bar{\bar{n}}=\mathrm{Max}(\{y|\ y=|p^{\bullet}\cap T|, p \in P_A\})$. Hence, when executing the for-loop in lines 2-15 each time, lines 6-7 repeat at most $\bar{\bar{n}}$ times, where the obtained $R_{i,j}$ has at most $\hat{n}$ elements. Hence, $b=\mathbb{I}_{j\in J}|R_{i,j}|\leq\hat{n}^{\bar{\bar{n}}}$. We then have that the for-loop in lines 9-12 repeat at most $\hat{n}^{\bar{\bar{n}}}$ times. As a result, at most $\hat{n}^{\bar{\bar{n}}}$ elements in Ω are obtained. Since there are at most $|P_A|$ critical places, the for loop in lines 2-15 is repeated no more than $|P_A|$ times. Thus, there are no more than $|P_A|\hat{n}^{\bar{\bar{n}}}$ elements in Ω, i.e., there are at most $|P_A|\hat{n}^{\bar{\bar{n}}}$ RPs. For an AMS modeled by an S^{4}PR, $\hat{n}$ represents the maximum number of resource types required

Algorithm S1: Detection of Ω

Input: S^{4}PR $\mathcal{N}\hat{=}(P_0 \cup P_A \cup P_R, T, F, W, M_0)$
Output: Ω
1 Let $\Omega=\varnothing$;
2 **For** each $p_i \in P_A$, **do**
4 **If** p_i is a critical place, **then**
5 Let $P_{Ri}=\{r \mid r \in P_R, p_i \in \|\pi_r\|\}$;
6 **For** each $t_j \in p_i^{\bullet}$, **do**
7 Let $R_{i,j}=\{r^w \mid r \in {}^{\bullet}t_j \cap P_R, w=W(r, t_j)-1\}$;
8 **End**
9 **For** a=1 to b, where $b=\mathbb{I}_{j \in J}|R_{i,j}|$, **do**
10 Let L_{i-a} be a unique set containing one element of each $R_{i,j}$, where $\forall r^w, r^{w'} \in L_{i-a}$, if $w<w'$, then $L_{i-a}=L_{i-a} \backslash \{r^{w'}\}$;
11 Let $\omega_{i-a}=<P_{Ri}, L_{i-a}>$ and $\Omega=\Omega \cup \{\omega_{i-a}\}$;
12 **End**
13 **End**
14 **End**
15 **End**
16 **Return** Ω;
17 **End**

for a single-step processing operation within the system, and $\bar{\bar{n}}$ denotes the maximum number of parallel processes when machining the same type of part. For example, in the AMS modeled by the S^{4}PR in Fig. 2, the processing operation represented by t_3 requires two types of resources (r_2 and r_3), while the other operations require only one type. Hence, we have that $\hat{n}$=2. In addition, the job type represented in the left subnet allows two parallel sequential processes to process the same type of part, while the job type shown in the right subnet can only be completed by one sequential process. Hence, we obtain that $\bar{\bar{n}}$=2. Notice that the number of RPs is $|P_A|\hat{n}^{\bar{\bar{n}}}$ only if there are $\hat{n}$ input resource places for each transition and $\bar{\bar{n}}$ output transitions for each activity place. In general, the number of RPs is much smaller than $|P_A|\hat{n}^{\bar{\bar{n}}}$. For example, for the S^{4}PR in Fig. 2, $|P_A|$=7 and $\hat{n}=\bar{\bar{n}}$=2. Hence, $|P_A|\hat{n}^{\bar{\bar{n}}}$ =28. However, from Table II, there are only 6 RPs in this S^{4}PR.

Let us now estimate the time complexity of Algorithm S1. Suppose that $|T|$ and $|P_R|$ are the number of transitions and resource places, respectively. By line 5, the time complexity of obtaining P_{Ri} is $O(|P_R|)$. From lines 6-8, we have that the time complexity of finding $R_{i,j}$ is $O(|T||P_R|)$. For lines 9-12, the time complexity is $O(\hat{n}^{\bar{\bar{n}}})$. For each activity place p_i, we repeat the above steps (lines 2-15). Hence, the total time complexity of Algorithm S1 is $O(|P_A|(|T||P_R|+\hat{n}^{\bar{\bar{n}}}))$.

S.III. *CRP Detection Algorithm*

In this section, Algorithm S2 is introduced to detect all CRPs. For each RP ω_{i-a} in Ω, we need to determine if there is a CRP $\hat{\Omega}$ such that $\omega_{i-a} \in \hat{\Omega}$ (lines 2-6 of Algorithm S2), where Function S1 is used to recursively determine elements in $\hat{\Omega}$. Specifically, suppose that there is a CRP $\hat{\Omega}$ such that $\omega_{i-a} \in \hat{\Omega}$. According to Theorem 4, $\hat{\Omega}$ satisfies that $\forall r \in \mathscr{R}$: $r \in \Phi$. Hence, we first initialize $\hat{\Omega}=\{\omega_{i-a}\}$. Then, we need to compute $\mathscr{R}$ and Φ and determine whether $\exists r \in \mathscr{R}$ such that $r \notin \Phi$ (lines 1 and 2 of Function S1). If $\exists r \in \mathscr{R}$ such that

Algorithm S2: Detection of Θ

Input: Ω
Output: Θ
1 Let $\Theta=\varnothing$;
2 **For** $\forall \omega_{i-a} \in \Omega$, where $\omega_{i-a}=<P_{Ri}, L_{i-a}>$, **do**
3 Let $\Theta'=\{\{\omega_{i-a}\}\}$ and $\Theta_{i-a}=\varnothing$;
4 **For** each $\hat{\Omega} \in \Theta'$, **do**
5 $[\Theta_{i-a}, \Theta']=F_{s1}(\hat{\Omega}, \Omega, \Theta', \Theta_{i-a})$;
6 **End**
7 **For** each $\hat{\Omega} \in \Theta_{i-a}$, **do**
8 $[\Theta_{i-a}]=F_{s2}(\hat{\Omega}, \Theta_{i-a}, \Omega)$;
9 **End**
10 $\Theta=\Theta \cup \Theta_{i-a}$;
11 $\Omega=\Omega \backslash \{\omega_{i-a}\}$;
12 $[\Omega]=F_{s3}(P_{Ri}, \Omega, P_A)$
13 **End**
14 **Return** Θ
15 **End**

Function S1: $[\Theta_{i-a}, \Theta']=F_{s1}(\hat{\Omega}, \Omega, \Theta', \Theta_{i-a})$

Input: $\hat{\Omega}, \Omega, \Theta', \Theta_{i-a}$
Output: Θ_{i-a}, Θ'
1 Let $\mathscr{R}=\{r \mid r^w \in L_{k-a}, \omega_{k-a} \in \hat{\Omega}, \omega_{k-a}=<P_{Rk}, L_{k-a}>\}$, $\Phi=\{r \mid r \in P_{Rk}, \omega_{k-a} \in \hat{\Omega}, \omega_{k-a}=<P_{Rk}, L_{k-a}>\}$, $\Omega'=\Omega \backslash \{\hat{\Omega}\}$, and $\Theta'=\Theta' \backslash \{\hat{\Omega}\}$;
2 **If** $\exists r \in \mathscr{R} \backslash \Phi$, **then**
3 **For** each ω_{j-c} in Ω', where $\omega_{j-c}=<P_{Rj}, L_{j-c}>$, **do**
4 **If** $r \in P_{Rj}$, **then**
5 $\hat{\Omega}'=\hat{\Omega} \cup \{\omega_{j-c}\}$ and $\Theta'=\Theta' \cup \{\hat{\Omega}'\}$;
6 **End**
7 **End**
8 **Else**
9 $\Theta_{i-a}=\Theta_{i-a} \cup \{\hat{\Omega}\}$;
10 **End**
11 **Return** Θ_{i-a} and Θ';
12 **End**

Function S2: $[\Theta_{i-a}]=F_{s2}(\hat{\Omega}, \Theta_{i-a}, \Omega)$

Input: $\hat{\Omega}, \Theta_{i-a}, \Omega$
Output: Θ_{i-a}
1 Let $\Phi=\{r \mid r \in P_{Rk}, \omega_{k-a} \in \hat{\Omega}, \omega_{k-a}=<P_{Rk}, L_{k-a}>\}$ and $P_K=\{p_k \mid \omega_{k-a} \in \hat{\Omega}\}$;
2 **For** each $\omega_{z-c} \in \Omega \backslash \hat{\Omega}$, **do**
3 **If** $\forall r^w \in L_{z-c}$: $r \in \Phi$ and $p_z \notin P_K$, **then**
4 Let $\hat{\Omega}'=\hat{\Omega} \cup \{\omega_{z-c}\}$ and $\Theta_{i-a}=\Theta_{i-a} \cup \hat{\Omega}'$;
5 **End**
6 **End**
7 **Return** Θ_{i-a};
8 **End**

Function S3: $[\Omega]=F_{s3}(P_{Ri}, \Omega, P_A)$

Input: P_{Ri}, Ω, P_A
Output: Ω
1 **For** each $r \in P_{Ri}$, **do**
2 **If** $\forall \omega_{j-a} \in \Omega$: $p_j \notin \|\pi_r\|$, **then**
3 **For** each $\omega_{u-c} \in \Omega$, where $r \in \{r \mid r^w \in L_{u-c}, \omega_{u-c}=<P_{Ru}, L_{u-c}>\}$, **do**
4 $\Omega=\Omega \backslash \{\omega_{u-c}\}$;
5 **End**
6 **End**
7 **End**
8 **Return** Ω;
9 **End**

$r \notin \Phi$, since $\Phi=\{P_{Ri} | \omega_{i-a} \in \hat{\Omega}, \omega_{i-a}=<P_{Ri}, L_{i-a}>\}$, we need to find a RP $\omega_{j-c}=<P_{Rj}, L_{j-c}>$ such that $r \in P_{Rj}$ and update $\hat{\Omega}$ (lines 2-7 of Function S1); otherwise, if $\forall r \in \mathscr{R}$: $r \in \Phi$, $\hat{\Omega}$ is a CRP (lines 8-10 of Function S1). For each CRP $\hat{\Omega}$ obtained through the above process, if $\exists \omega_{z-c} \in \Omega$ and $\omega_{z-c} \notin \hat{\Omega}$: $\forall r^w \in L_{z-c}$, $r \in \Phi$, we have that $\hat{\Omega}' = \hat{\Omega} \cup \{\omega_{z-c}\}$ is a CRP (lines 7-9 of Algorithm S2 and Function S2). Hence, Function 2 is proposed to determine new CRPs by adding RPs to a obtained CRP. Then, we obtain all CRPs that contain ω_{i-a}. Subsequently, we can remove ω_{i-a} from Ω (line 11 of Algorithm S2). For each $r \in P_{Ri}$, if $\forall \omega_{j-a} \in \Omega$: $p_j \notin \|\pi_r\|$, we have that $\forall \hat{\Omega}'' \subseteq \Omega$: $r \notin \{P_{Rk} | \omega_{k-c} \in \hat{\Omega}'', \omega_{k-c}=<P_{Rk}, L_{k-c}>\}$. For each $\omega_{u-c} \in \Omega$, if $r \in \{r' | r'^w \in L_{u-c}, \omega_{u-c}=<P_{Ru}, L_{u-c}>\}$, according to Theorem 4, there is no CRP containing ω_{u-c}. Thus, Function S3 is given to remove ω_{u-c} from Ω, thereby reducing the computational complexity of detecting CRPs. For each RP, we repeat the above process, all CRPs can be obtained (lines 1-4 of Algorithm S2). Θ_{i-a} represents the set of CRPs that contains ω_{i-a}, where the number of elements in Θ_{i-a} is no more than $|\Omega|$-1, where $|\Omega|$ is the number of elements in Ω. From line 10 of Algorithm S2,

$$\Theta = \cup_{\omega_{i-a} \in \Omega} \Theta_{i-a}.$$

Since there are at most $|\Omega|$ elements in Ω, the number of CRPs is no greater than $|\Omega|(|\Omega|-1)$. According to Algorithm S1, $|\Omega| \leq |P_A| \hat{n}^{\bar{\bar{n}}}$.

Next, we evaluate the time complexity of Algorithm S2. From line 1 of Function S1, $\Omega' = \Omega \backslash \{\hat{\Omega}\}$, i.e., $|\Omega'| \leq |\Omega|$. Hence, the time complexity of Function S1 is $O(|\Omega|)$. In the worst case, $\forall \omega_{j-a}, \omega_{k-c} \in \Omega$: $\hat{\Omega} = \{\omega_{j-a}, \omega_{k-c}\}$ is a CRP. In this case, Function S1 needs to be repeated $|\Omega|$ times and there are $|\Omega|$-1 elements in Θ_{i-a}. Thus, the complexity of lines 4-6 of Algorithm S2 is $O(|\Omega|^2)$. According to line 2 of Function S2, $\omega_{z-a} \in \Omega \backslash \hat{\Omega}$. Hence, the time complexity of Function S2 is $O(|\Omega|)$. Since there $|\Omega|$-1 elements in Θ_{i-a}, the time complexity of lines 7-9 of Algorithm S2 is $O(|\Omega|^2)$. For Function S3, since $P_{Ri} \subseteq P_R$ and $\omega_{u-c} \in \Omega$, the time complexity of Function S3 is $O(|P_R||\Omega|)$. Thus, the time complexity of lines 3-12 of Algorithm S2 is $O(|\Omega|^2+|P_R||\Omega|)$. From lines 2-13, the above steps need to be repeated $|\Omega|$ times. Hence, the total time complexity of Algorithm S2 is $O(|\Omega|^3+|P_R||\Omega|^2)$.

S.IV. *Partial Deadlock Detection Algorithm*

After obtaining CRPs, Algorithm S3 is proposed to determine the corresponding partial deadlocks, where for each CRP, Function S4 is used to determine the corresponding reachable partial deadlocks. For Function S4, its time complexity is related to the time complexity of solving equations and the number of solutions. According to (9), for each $p_i \in P_I$, after determining $M(p_i)$, M can be uniquely determined accordingly. According to Property 2, $M(p_i) \leq \tilde{m}_i = \text{Min}\{M_0(r) | r \in P_R, p_i \in \prod_r\}$. Hence, there are at most $\delta_i = \mathbb{I}_{i \in \{i | p_i \in P_I\}} \tilde{m}_i$ possible combinations, and the time complexity of determining M is $\Re_1 = O(\delta_i)$. As a result, the total time complexity of Function S4 is $\Re_1+\Re_2$, where $\Re_2 = O(n_1|T|(c|P|+|T|^2))$ is the time complexity of SBA, and n_1 and c are the number of directed circuits and the sum of the non-zero elements in a solution to a state equation, respectively. For each CRP, we need to use Function S4 to determine the corresponding partial deadlocks. The number of CRPs is no greater than $|\Omega|(|\Omega|-1)$, where $|\Omega| \leq |P_A| \hat{n}^{\bar{\bar{n}}}$. Hence, the time complexity of Algorithm S3 is $O(|\Omega|^2(\Re_1+\Re_2))$. Thus, the time complexity of Algorithm S3

Algorithm S3: Partial Deadlock Detection for S^{4}PR with Variable Initial Markings
Input: S^{4}PR $\mathcal{N} \triangleq (P_0 \cup P_A \cup P_R, T, F, W, M_0)$ and Θ
Output: M_D
1 Let $M_D = \varnothing$;
2 **For** $\forall \hat{\Omega} \in \Theta$, **do**
3 $[I, M_D] = F_1(\hat{\Omega}, M_0, M_D)$;
4 **End**
5 **Return** M_D
6 **End**

Function S4: $[I, M_D] = F_1(\hat{\Omega}, M_0, M_D)$
Input: $\hat{\Omega}$, M_0, M_D
Output: I, M_D
1 Let $P_I = \{p_i | \omega_{i-a} \in \hat{\Omega}\}$, $\omega_{i-a}=<P_{Ri}, L_{i-a}>\}$, $\mathscr{R}=\{r | r^w \in L_{i-a}, \omega_{i-a} \in \hat{\Omega}, \omega_{i-a}=<P_{Ri}, L_{i-a}>\}$, and $\Phi=\{r | r \in P_{Ri}, \omega_{i-a} \in \hat{\Omega}, \omega_{i-a}=<P_{Ri}, L_{i-a}>\}$;
If $\exists r \in \Phi$: $\prod_r \cap P_I > M_0(r)$, **then** //Property 2 unsatisfied
Return M_D and I=0;
Else //Determine partial deadlocks corresponding to $\hat{\Omega}$
2 Solving (9) to obtain all solutions;
3 **For** each M that satisfies (9), **do**
4 Determining the reachability of M via SBA [48];
5 **If** M is reachable, **then**
6 $M_D = M_D \cup \{M\}$;
7 **End**
8 **End**
13 **Return** I=1 and M_D;
14 **End**
15 **End**

Algorithm S4: Partial Deadlock Detection for S^{4}PR with Invariant Initial Marking
Input: Ω and M_0
Output: Set of partial deadlocks M_D
1 Let $\Theta = M_D = \varnothing$;
2 **For** $\forall \omega_{i-a} \in \Omega$, where $\omega_{i-a}=<P_{Ri}, L_{i-a}>$, **do**
3 Let $\Theta' = \{\{\omega_{i-a}\}\}$ and $\Theta_i = \varnothing$;
4 **For** $\forall \hat{\Omega} \in \Theta'$, **do**
5 $[\Theta_i, \Theta'] = F_{s1}(\hat{\Omega}, \Omega, \Theta', \Theta_i)$;
6 **End**
7 **For** $\forall \Omega \in \Theta_i$, **do**
8 $[I, M_D] = F_1(\hat{\Omega}, M_0, M_D)$;
9 **If** I=1, **then**
10 $[\Theta_i] = F_{s2}(\hat{\Omega}, \Theta_i, \Omega)$;
11 **End**
12 **End**
13 $\Theta = \Theta \cup \Theta_i$;
14 $\Omega = \Omega \backslash \{\Omega_i\}$;
15 $[\Omega] = F_{s3}(P_{Ri}, \Omega, P_A)$
16 **End**
17 **Return** M_D
18 **End**

increases exponentially with the number of output transitions of an activity place and the number of tokens in a resource place.

When the initial marking remains unchanged, the number of CRPs that need to be considered can be reduced, thereby lowering the computational complexity. Hence, Algorithm S4 is developed to detect partial deadlocks for S^4PR with invariant initial marking.

S.V. CRPs and Partial Deadlocks of S^4PR in Fig. 5

Table S1 shows all the partial deadlocks and CRPs of the S^4PR shown in Fig. 5 of this paper.

TABLE S1
CRPs AND PARTIAL DEADLOCKS OF S^4PR IN FIG. 5

CRPs	**Partial deadlocks**
$\hat{\Omega}_1=\{\omega_{1\text{-}1}, \omega_{15\text{-}1}\}$	$M_1=p_1+9p_8+10p_{12}+2p_{15}+8p_{20}+3p_{22}+p_{23}+3p_{24}+3p_{25}$
$\hat{\Omega}_2=\{\omega_{1\text{-}1}, \omega_{14\text{-}1}, \omega_{15\text{-}1}\}$	$M_2=p_1+9p_8+10p_{12}+p_{14}+2p_{15}+7p_{20}+p_{22}+p_{23}+2p_{24}+3p_{25}$
$\hat{\Omega}_3=\{\omega_{1\text{-}1}, \omega_{3\text{-}1}, \omega_{14\text{-}1}, \omega_{15\text{-}1}\}$	$M_3=p_1+p_3+8p_8+10p_{12}+p_{14}+2p_{15}+7p_{20}+p_{22}+p_{23}+p_{24}+3p_{25}$
	$M_4=p_1+2p_3+7p_8+10p_{12}+p_{14}+2p_{15}+7p_{20}+p_{22}+p_{23}+3p_{25}$
$\hat{\Omega}_4=\{\omega_{1\text{-}1}, \omega_{7\text{-}1}, \omega_{14\text{-}1}, \omega_{15\text{-}1}\}$	$M_5=p_1+2p_7+7p_8+10p_{12}+p_{14}+2p_{15}+7p_{20}+p_{22}+p_{23}+3p_{25}$
	$M_6=p_1+p_7+8p_8+10p_{12}+p_{14}+2p_{15}+7p_{20}+p_{22}+p_{23}+p_{24}+3p_{25}$
$\hat{\Omega}_5=\{\omega_{1\text{-}1}, \omega_{3\text{-}1}, \omega_{6\text{-}1}, \omega_{14\text{-}1}, \omega_{15\text{-}1}\}$	$M_7=p_1+2p_3+p_6+6p_8+10p_{12}+p_{14}+p_{15}+8p_{20}+p_{22}+p_{23}+3p_{25}$
$\hat{\Omega}_6=\{\omega_{1\text{-}1}, \omega_{3\text{-}1}, \omega_{6\text{-}1}, \omega_{7\text{-}1}, \omega_{14\text{-}1}, \omega_{15\text{-}1}\}$	$M_8=p_1+p_3+p_6+p_7+6p_8+10p_{12}+p_{14}+p_{15}+8p_{20}+p_{22}+p_{23}+3p_{25}$
$\hat{\Omega}_7=\{\omega_{1\text{-}1}, \omega_{3\text{-}1}, \omega_{6\text{-}1}, \omega_{7\text{-}1}, \omega_{10\text{-}1}, \omega_{14\text{-}1}, \omega_{15\text{-}1}\}$	$M_9=p_1+p_3+p_6+p_7+6p_8+p_{10}+9p_{12}+p_{14}+p_{15}+8p_{20}+p_{22}+p_{23}+p_{25}$
$\hat{\Omega}_8=\{\omega_{1\text{-}1}, \omega_{3\text{-}1}, \omega_{6\text{-}1}, \omega_{10\text{-}1}, \omega_{14\text{-}1}, \omega_{15\text{-}1}\}$	$M_{10}=p_1+2p_3+p_6+6p_8+p_{10}+9p_{12}+p_{14}+p_{15}+8p_{20}+p_{22}+p_{23}+p_{25}$
$\hat{\Omega}_9=\{\omega_{1\text{-}1}, \omega_{3\text{-}1}, \omega_{7\text{-}1}, \omega_{14\text{-}1}, \omega_{15\text{-}1}\}$	$M_{11}=p_1+p_3+p_7+7p_8+10p_{12}+p_{14}+2p_{15}+7p_{20}+p_{22}+p_{23}+3p_{25}$
$\hat{\Omega}_{10}=\{\omega_{1\text{-}1}, \omega_{2\text{-}1}, \omega_{3\text{-}1}, \omega_{7\text{-}1}, \omega_{14\text{-}1}, \omega_{15\text{-}1}\}$	$M_{12}=p_1+p_2+p_3+p_7+6p_8+10p_{12}+p_{14}+p_{15}+8p_{20}+p_{22}+p_{23}+3p_{25}$
$\hat{\Omega}_{11}=\{\omega_{1\text{-}1}, \omega_{3\text{-}1}, \omega_{7\text{-}1}, \omega_{10\text{-}1}, \omega_{14\text{-}1}, \omega_{15\text{-}1}\}$	$M_{13}=p_1+p_3+p_7+7p_8+p_{10}+9p_{12}+p_{14}+2p_{15}+7p_{20}+p_{22}+p_{23}+p_{25}$
$\hat{\Omega}_{12}=\{\omega_{1\text{-}1}, \omega_{3\text{-}1}, \omega_{10\text{-}1}, \omega_{14\text{-}1}, \omega_{15\text{-}1}\}$	$M_{14}=p_1+2p_3+7p_8+p_{10}+9p_{12}+p_{14}+2p_{15}+7p_{20}+p_{22}+p_{23}+p_{25}$
$\hat{\Omega}_{13}=\{\omega_{1\text{-}1}, \omega_{2\text{-}1}, \omega_{3\text{-}1}, \omega_{10\text{-}1}, \omega_{14\text{-}1}, \omega_{15\text{-}1}\}$	$M_{15}=p_1+p_2+2p_3+6p_8+p_{10}+9p_{12}+p_{14}+p_{15}+8p_{20}+p_{22}+p_{23}+p_{25}$
$\hat{\Omega}_{14}=\{\omega_{1\text{-}1}, \omega_{2\text{-}1}, \omega_{3\text{-}1}, \omega_{7\text{-}1}, \omega_{10\text{-}1}, \omega_{14\text{-}1}, \omega_{15\text{-}1}\}$	$M_{16}=p_1+p_2+p_3+p_7+6p_8+p_{10}+9p_{12}+p_{14}+p_{15}+8p_{20}+p_{22}+p_{23}+p_{25}$
$\hat{\Omega}_{15}=\{\omega_{1\text{-}1}, \omega_{6\text{-}1}, \omega_{7\text{-}1}, \omega_{14\text{-}1}, \omega_{15\text{-}1}\}$	$M_{17}=p_1+p_6+2p_7+6p_8+10p_{12}+p_{14}+p_{15}+8p_{20}+p_{22}+p_{23}+3p_{25}$
$\hat{\Omega}_{16}=\{\omega_{1\text{-}1}, \omega_{6\text{-}1}, \omega_{7\text{-}1}, \omega_{10\text{-}1}, \omega_{14\text{-}1}, \omega_{15\text{-}1}\}$	$M_{18}=p_1+p_6+2p_7+6p_8+p_{10}+9p_{12}+p_{14}+p_{15}+8p_{20}+p_{22}+p_{23}+p_{25}$
$\hat{\Omega}_{17}=\{\omega_{1\text{-}1}, \omega_{7\text{-}1}, \omega_{10\text{-}1}, \omega_{14\text{-}1}, \omega_{15\text{-}1}\}$	$M_{19}=p_1+2p_7+7p_8+p_{10}+9p_{12}+p_{14}+2p_{15}+7p_{20}+p_{22}+p_{23}+p_{25}$
$\hat{\Omega}_{18}=\{\omega_{1\text{-}1}, \omega_{2\text{-}1}, \omega_{7\text{-}1}, \omega_{10\text{-}1}, \omega_{14\text{-}1}, \omega_{15\text{-}1}\}$	$M_{20}=p_1+p_2+2p_7+6p_8+p_{10}+9p_{12}+p_{14}+p_{15}+8p_{20}+p_{22}+p_{23}+p_{25}$
$\hat{\Omega}_{19}=\{\omega_{1\text{-}1}, \omega_{2\text{-}1}, \omega_{3\text{-}1}, \omega_{13\text{-}1}\}$	$M_{21}=p_1+2p_2+3p_3+4p_8+10p_{12}+p_{13}+9p_{20}+p_{22}+3p_{25}$
$\hat{\Omega}_{20}=\{\omega_{1\text{-}1}, \omega_{2\text{-}1}, \omega_{3\text{-}1}, \omega_{6\text{-}1}, \omega_{13\text{-}1}\}$	$M_{22}=p_1+p_2+3p_3+p_6+4p_8+10p_{12}+p_{13}+9p_{20}+p_{22}+3p_{25}$
$\hat{\Omega}_{21}=\{\omega_{1\text{-}1}, \omega_{2\text{-}1}, \omega_{3\text{-}1}, \omega_{6\text{-}1}, \omega_{7\text{-}1}, \omega_{13\text{-}1}\}$	$M_{23}=p_1+p_2+p_3+p_6+2p_7+4p_8+10p_{12}+p_{13}+9p_{20}+p_{22}+3p_{25}$
	$M_{24}=p_1+p_2+2p_3+p_6+p_7+4p_8+10p_{12}+p_{13}+9p_{20}+p_{22}+3p_{25}$
$\hat{\Omega}_{22}=\{\omega_{1\text{-}1}, \omega_{2\text{-}1}, \omega_{3\text{-}1}, \omega_{6\text{-}1}, \omega_{7\text{-}1}, \omega_{10\text{-}1}, \omega_{13\text{-}1}\}$	$M_{25}=p_1+p_2+p_3+p_6+2p_7+4p_8+p_{10}+9p_{12}+p_{13}+9p_{20}+p_{22}+p_{25}$
	$M_{26}=p_1+p_2+2p_3+p_6+p_7+4p_8+p_{10}+9p_{12}+p_{13}+9p_{20}+p_{22}+p_{25}$
$\hat{\Omega}_{23}=\{\omega_{1\text{-}1}, \omega_{2\text{-}1}, \omega_{3\text{-}1}, \omega_{6\text{-}1}, \omega_{10\text{-}1}, \omega_{13\text{-}1}\}$	$M_{27}=p_1+p_2+3p_3+p_6+4p_8+p_{10}+9p_{12}+p_{13}+9p_{20}+p_{22}+p_{25}$
$\hat{\Omega}_{24}=\{\omega_{1\text{-}1}, \omega_{2\text{-}1}, \omega_{3\text{-}1}, \omega_{7\text{-}1}, \omega_{13\text{-}1}\}$	$M_{28}=p_1+2p_2+2p_3+p_7+4p_8+10p_{12}+p_{13}+9p_{20}+p_{22}+3p_{25}$
	$M_{29}=p_1+2p_2+p_3+2p_7+4p_8+10p_{12}+p_{13}+9p_{20}+p_{22}+3p_{25}$
$\hat{\Omega}_{25}=\{\omega_{1\text{-}1}, \omega_{2\text{-}1}, \omega_{3\text{-}1}, \omega_{7\text{-}1}, \omega_{10\text{-}1}, \omega_{13\text{-}1}\}$	$M_{30}=p_1+2p_2+p_3+2p_7+4p_8+p_{10}+9p_{12}+p_{13}+9p_{20}+p_{22}+p_{25}$
	$M_{31}=p_1+2p_2+2p_3+p_7+4p_8+p_{10}+9p_{12}+p_{13}+9p_{20}+p_{22}+p_{25}$
$\hat{\Omega}_{26}=\{\omega_{1\text{-}1}, \omega_{2\text{-}1}, \omega_{3\text{-}1}, \omega_{7\text{-}1}, \omega_{10\text{-}1}, \omega_{13\text{-}1}, \omega_{15\text{-}1}\}$	$M_{32}=p_1+p_2+p_3+2p_7+5p_8+p_{10}+9p_{12}+p_{13}+p_{15}+8p_{20}+p_{22}+p_{25}$
	$M_{33}=p_1+p_2+2p_3+p_7+5p_8+p_{10}+9p_{12}+p_{13}+p_{15}+8p_{20}+p_{22}+p_{25}$
$\hat{\Omega}_{27}=\{\omega_{1\text{-}1}, \omega_{2\text{-}1}, \omega_{3\text{-}1}, \omega_{7\text{-}1}, \omega_{13\text{-}1}, \omega_{15\text{-}1}\}$	$M_{34}=p_1+p_2+p_3+2p_7+5p_8+10p_{12}+p_{13}+p_{15}+8p_{20}+p_{22}+3p_{25}$
	$M_{35}=p_1+p_2+2p_3+p_7+5p_8+10p_{12}+p_{13}+p_{15}+8p_{20}+p_{22}+3p_{25}$
$\hat{\Omega}_{28}=\{\omega_{1\text{-}1}, \omega_{2\text{-}1}, \omega_{3\text{-}1}, \omega_{10\text{-}1}, \omega_{13\text{-}1}\}$	$M_{36}=p_1+2p_2+3p_3+4p_8+p_{10}+9p_{12}+p_{13}+9p_{20}+p_{22}+p_{25}$
$\hat{\Omega}_{29}=\{\omega_{1\text{-}1}, \omega_{2\text{-}1}, \omega_{3\text{-}1}, \omega_{10\text{-}1}, \omega_{13\text{-}1}, \omega_{15\text{-}1}\}$	$M_{37}=p_1+p_2+3p_3+5p_8+p_{10}+9p_{12}+p_{13}+p_{15}+8p_{20}+p_{22}+p_{25}$
$\hat{\Omega}_{30}=\{\omega_{1\text{-}1}, \omega_{2\text{-}1}, \omega_{3\text{-}1}, \omega_{13\text{-}1}, \omega_{15\text{-}1}\}$	$M_{38}=p_1+p_2+3p_3+5p_8+10p_{12}+p_{13}+p_{15}+8p_{20}+p_{22}+3p_{25}$
$\hat{\Omega}_{31}=\{\omega_{1\text{-}1}, \omega_{2\text{-}1}, \omega_{3\text{-}1}, \omega_{14\text{-}1}\}$	$M_{39}=p_1+2p_2+2p_3+5p_8+10p_{12}+p_{14}+9p_{20}+p_{22}+p_{23}+3p_{25}$
$\hat{\Omega}_{32}=\{\omega_{1\text{-}1}, \omega_{2\text{-}1}, \omega_{3\text{-}1}, \omega_{6\text{-}1}, \omega_{14\text{-}1}\}$	$M_{40}=p_1+p_2+2p_3+p_6+5p_8+10p_{12}+p_{14}+9p_{20}+p_{22}+p_{23}+3p_{25}$
$\hat{\Omega}_{33}=\{\omega_{1\text{-}1}, \omega_{2\text{-}1}, \omega_{3\text{-}1}, \omega_{6\text{-}1}, \omega_{7\text{-}1}, \omega_{14\text{-}1}\}$	$M_{41}=p_1+p_2+p_3+p_6+p_7+5p_8+10p_{12}+p_{14}+9p_{20}+p_{22}+p_{23}+3p_{25}$
$\hat{\Omega}_{34}=\{\omega_{1\text{-}1}, \omega_{2\text{-}1}, \omega_{3\text{-}1}, \omega_{6\text{-}1}, \omega_{7\text{-}1}, \omega_{10\text{-}1}, \omega_{14\text{-}1}\}$	$M_{42}=p_1+p_2+p_3+p_6+p_7+5p_8+p_{10}+9p_{12}+p_{14}+9p_{20}+p_{22}+p_{23}+p_{25}$

$\hat{\Omega}_{35}=\{\omega_{1\text{-}1}, \omega_{2\text{-}1}, \omega_{3\text{-}1}, \omega_{6\text{-}1}, \omega_{10\text{-}1}, \omega_{14\text{-}1}\}$	$M_{43}=p_1+p_2+2p_3+p_6+5p_8+p_{10}+9p_{12}+p_{14}+9p_{20}+p_{22}+p_{23}+p_{25}$
$\hat{\Omega}_{36}=\{\omega_{1\text{-}1}, \omega_{2\text{-}1}, \omega_{3\text{-}1}, \omega_{7\text{-}1}, \omega_{14\text{-}1}\}$	$M_{44}=p_1+2p_2+p_3+p_7+5p_8+10p_{12}+p_{14}+9p_{20}+p_{22}+p_{23}+3p_{25}$
$\hat{\Omega}_{37}=\{\omega_{1\text{-}1}, \omega_{2\text{-}1}, \omega_{3\text{-}1}, \omega_{10\text{-}1}, \omega_{14\text{-}1}\}$	$M_{45}=p_1+2p_2+2p_3+5p_8+p_{10}+9p_{12}+p_{14}+9p_{20}+p_{22}+p_{23}+p_{25}$
$\hat{\Omega}_{38}=\{\omega_{1\text{-}1}, \omega_{2\text{-}1}, \omega_{3\text{-}1}, \omega_{14\text{-}1}, \omega_{15\text{-}1}\}$	$M_{46}=p_1+p_2+2p_3+6p_8+10p_{12}+p_{14}+p_{15}+8p_{20}+p_{22}+p_{23}+3p_{25}$
$\hat{\Omega}_{39}=\{\omega_{1\text{-}1}, \omega_{2\text{-}1}, \omega_{7\text{-}1}, \omega_{13\text{-}1}\}$	$M_{47}=p_1+2p_2+3p_7+4p_8+10p_{12}+p_{13}+9p_{20}+p_{22}+3p_{25}$
$\hat{\Omega}_{40}=\{\omega_{1\text{-}1}, \omega_{2\text{-}1}, \omega_{6\text{-}1}, \omega_{7\text{-}1}, \omega_{13\text{-}1}\}$	$M_{48}=p_1+p_2+p_6+3p_7+4p_8+10p_{12}+p_{13}+9p_{20}+p_{22}+3p_{25}$
$\hat{\Omega}_{41}=\{\omega_{1\text{-}1}, \omega_{2\text{-}1}, \omega_{6\text{-}1}, \omega_{7\text{-}1}, \omega_{10\text{-}1}, \omega_{13\text{-}1}\}$	$M_{49}=p_1+p_2+p_6+3p_7+4p_8+p_{10}+9p_{12}+p_{13}+9p_{20}+p_{22}+p_{25}$
$\hat{\Omega}_{42}=\{\omega_{1\text{-}1}, \omega_{2\text{-}1}, \omega_{7\text{-}1}, \omega_{10\text{-}1}, \omega_{13\text{-}1}\}$	$M_{50}=p_1+2p_2+3p_7+4p_8+p_{10}+9p_{12}+p_{13}+9p_{20}+p_{22}+p_{25}$
$\hat{\Omega}_{43}=\{\omega_{1\text{-}1},\omega_{2\text{-}1}, \omega_{7\text{-}1}, \omega_{10\text{-}1}, \omega_{13\text{-}1}, \omega_{15\text{-}1}\}$	$M_{51}=p_1+p_2+3p_7+5p_8+p_{10}+9p_{12}+p_{13}+p_{15}+8p_{20}+p_{22}+p_{25}$
$\hat{\Omega}_{44}=\{\omega_{1\text{-}1}, \omega_{2\text{-}1}, \omega_{7\text{-}1}, \omega_{13\text{-}1}, \omega_{15\text{-}1}\}$	$M_{52}=p_1+p_2+3p_7+5p_8+10p_{12}+p_{13}+p_{15}+8p_{20}+p_{22}+3p_{25}$
$\hat{\Omega}_{45}=\{\omega_{1\text{-}1}, \omega_{2\text{-}1}, \omega_{7\text{-}1}, \omega_{14\text{-}1}\}$	$M_{53}=p_1+2p_2+2p_7+5p_8+10p_{12}+p_{14}+9p_{20}+p_{22}+p_{23}+3p_{25}$
$\hat{\Omega}_{46}=\{\omega_{1\text{-}1}, \omega_{2\text{-}1}, \omega_{6\text{-}1}, \omega_{7\text{-}1}, \omega_{14\text{-}1}\}$	$M_{54}=p_1+p_2+p_6+2p_7+5p_8+10p_{12}+p_{14}+9p_{20}+p_{22}+p_{23}+3p_{25}$
$\hat{\Omega}_{47}=\{\omega_{1\text{-}1}, \omega_{2\text{-}1}, \omega_{6\text{-}1}, \omega_{7\text{-}1}, \omega_{10\text{-}1}, \omega_{14\text{-}1}\}$	$M_{55}=p_1+p_2+p_6+2p_7+5p_8+p_{10}+9p_{12}+p_{14}+9p_{20}+p_{22}+p_{23}+p_{25}$
$\hat{\Omega}_{48}=\{\omega_{1\text{-}1}, \omega_{2\text{-}1}, \omega_{7\text{-}1}, \omega_{10\text{-}1}, \omega_{14\text{-}1}\}$	$M_{56}=p_1+2p_2+2p_7+5p_8+p_{10}+9p_{12}+p_{14}+9p_{20}+p_{22}+p_{23}+p_{25}$
$\hat{\Omega}_{49}=\{\omega_{1\text{-}1}, \omega_{2\text{-}1}, \omega_{3\text{-}1}, \omega_{7\text{-}1}, \omega_{10\text{-}1}, \omega_{14\text{-}1}\}$	$M_{57}=p_1+2p_2+p_3+p_7+5p_8+p_{10}+9p_{12}+p_{14}+9p_{20}+p_{22}+p_{23}+p_{25}$
$\hat{\Omega}_{50}=\{\omega_{1\text{-}1}, \omega_{2\text{-}1}, \omega_{7\text{-}1}, \omega_{14\text{-}1}, \omega_{15\text{-}1}\}$	$M_{58}=p_1+p_2+2p_7+6p_8+10p_{12}+p_{14}+p_{15}+8p_{20}+p_{22}+p_{23}+3p_{25}$
$\hat{\Omega}_{51}=\{\omega_{1\text{-}1}, \omega_{3\text{-}1}, \omega_{6\text{-}1}, \omega_{14\text{-}1}\}$	$M_{59}=p_1+2p_3+2p_6+5p_8+10p_{12}+p_{14}+9p_{20}+p_{22}+p_{23}+3p_{25}$
$\hat{\Omega}_{52}=\{\omega_{1\text{-}1}, \omega_{3\text{-}1}, \omega_{6\text{-}1}, \omega_{7\text{-}1}, \omega_{14\text{-}1}\}$	$M_{60}=p_1+p_3+2p_6+p_7+5p_8+10p_{12}+p_{14}+9p_{20}+p_{22}+p_{23}+3p_{25}$
$\hat{\Omega}_{53}=\{\omega_{1\text{-}1}, \omega_{3\text{-}1}, \omega_{6\text{-}1}, \omega_{7\text{-}1}, \omega_{10\text{-}1}, \omega_{14\text{-}1}\}$	$M_{61}=p_1+p_3+2p_6+p_7+5p_8+p_{10}+9p_{12}+p_{14}+9p_{20}+p_{22}+p_{23}+p_{25}$
$\hat{\Omega}_{54}=\{\omega_{1\text{-}1}, \omega_{3\text{-}1}, \omega_{6\text{-}1}, \omega_{10\text{-}1}, \omega_{14\text{-}1}\}$	$M_{62}=p_1+2p_3+2p_6+5p_8+p_{10}+9p_{12}+p_{14}+9p_{20}+p_{22}+p_{23}+p_{25}$
$\hat{\Omega}_{55}=\{\omega_{1\text{-}1}, \omega_{6\text{-}1}, \omega_{7\text{-}1}, \omega_{14\text{-}1}\}$	$M_{63}=p_1+2p_6+2p_7+5p_8+10p_{12}+p_{14}+9p_{20}+p_{22}+p_{23}+3p_{25}$
$\hat{\Omega}_{56}=\{\omega_{1\text{-}1}, \omega_{6\text{-}1}, \omega_{7\text{-}1}, \omega_{10\text{-}1}, \omega_{14\text{-}1}\}$	$M_{64}=p_1+2p_6+2p_7+5p_8+p_{10}+9p_{12}+p_{14}+9p_{20}+p_{22}+p_{23}+p_{25}$
$\hat{\Omega}_{57}=\{\omega_{1\text{-}1}, \omega_{3\text{-}1}, \omega_{6\text{-}1}, \omega_{13\text{-}1}\}$	$M_{65}=p_1+3p_3+2p_6+4p_8+10p_{12}+p_{13}+9p_{20}+p_{22}+3p_{25}$
$\hat{\Omega}_{58}=\{\omega_{1\text{-}1}, \omega_{3\text{-}1}, \omega_{6\text{-}1}, \omega_{7\text{-}1}, \omega_{13\text{-}1}\}$	$M_{66}=p_1+2p_3+2p_6+p_7+4p_8+10p_{12}+p_{13}+9p_{20}+p_{22}+3p_{25}$
	$M_{67}=p_1+p_3+2p_6+2p_7+4p_8+10p_{12}+p_{13}+9p_{20}+p_{22}+3p_{25}$
$\hat{\Omega}_{59}=\{\omega_{1\text{-}1}, \omega_{3\text{-}1}, \omega_{6\text{-}1}, \omega_{10\text{-}1}, \omega_{13\text{-}1}\}$	$M_{68}=p_1+3p_3+2p_6+4p_8+p_{10}+9p_{12}+p_{13}+9p_{20}+p_{22}+p_{25}$
$\hat{\Omega}_{60}=\{\omega_{1\text{-}1}, \omega_{3\text{-}1}, \omega_{6\text{-}1}, \omega_{7\text{-}1}, \omega_{10\text{-}1}, \omega_{13\text{-}1}\}$	$M_{69}=p_1+2p_3+2p_6+p_7+4p_8+p_{10}+9p_{12}+p_{13}+9p_{20}+p_{22}+p_{25}$
	$M_{70}=p_1+p_3+2p_6+2p_7+4p_8+p_{10}+9p_{12}+p_{13}+9p_{20}+p_{22}+p_{25}$
$\hat{\Omega}_{61}=\{\omega_{1\text{-}1}, \omega_{3\text{-}1}, \omega_{6\text{-}1}, \omega_{7\text{-}1}, \omega_{10\text{-}1}, \omega_{13\text{-}1}, \omega_{15\text{-}1}\}$	$M_{71}=p_1+2p_3+p_6+p_7+5p_8+p_{10}+9p_{12}+p_{13}+p_{15}+8p_{20}+p_{22}+p_{25}$
	$M_{72}=p_1+p_3+p_6+2p_7+5p_8+p_{10}+9p_{12}+p_{13}+p_{15}+8p_{20}+p_{22}+p_{25}$
$\hat{\Omega}_{62}=\{\omega_{1\text{-}1}, \omega_{3\text{-}1}, \omega_{6\text{-}1}, \omega_{10\text{-}1}, \omega_{13\text{-}1}, \omega_{15\text{-}1}\}$	$M_{73}=p_1+3p_3+p_6+5p_8+p_{10}+9p_{12}+p_{13}+p_{15}+8p_{20}+p_{22}+p_{25}$
$\hat{\Omega}_{63}=\{\omega_{1\text{-}1}, \omega_{3\text{-}1}, \omega_{6\text{-}1}, \omega_{13\text{-}1}, \omega_{15\text{-}1}\}$	$M_{74}=p_1+3p_3+p_6+5p_8+10p_{12}+p_{13}+p_{15}+8p_{20}+p_{22}+3p_{25}$
$\hat{\Omega}_{64}=\{\omega_{1\text{-}1}, \omega_{3\text{-}1}, \omega_{6\text{-}1}, \omega_{7\text{-}1}, \omega_{13\text{-}1}, \omega_{15\text{-}1}\}$	$M_{75}=p_1+2p_3+p_6+p_7+5p_8+10p_{12}+p_{13}+p_{15}+8p_{20}+p_{22}+3p_{25}$
	$M_{76}=p_1+p_3+p_6+2p_7+5p_8+10p_{12}+p_{13}+p_{15}+8p_{20}+p_{22}+3p_{25}$
$\hat{\Omega}_{65}=\{\omega_{1\text{-}1}, \omega_{6\text{-}1}, \omega_{7\text{-}1}, \omega_{13\text{-}1}\}$	$M_{77}=p_1+2p_6+3p_7+4p_8+10p_{12}+p_{13}+9p_{20}+p_{22}+3p_{25}$
$\hat{\Omega}_{66}=\{\omega_{1\text{-}1}, \omega_{6\text{-}1}, \omega_{7\text{-}1}, \omega_{10\text{-}1}, \omega_{13\text{-}1}\}$	$M_{78}=p_1+2p_6+3p_7+4p_8+p_{10}+9p_{12}+p_{13}+9p_{20}+p_{22}+p_{25}$
$\hat{\Omega}_{67}=\{\omega_{1\text{-}1}, \omega_{6\text{-}1}, \omega_{7\text{-}1}, \omega_{10\text{-}1}, \omega_{13\text{-}1}, \omega_{15\text{-}1}\}$	$M_{79}=p_1+p_6+3p_7+5p_8+p_{10}+9p_{12}+p_{13}+p_{15}+8p_{20}+p_{22}+p_{25}$
$\hat{\Omega}_{68}=\{\omega_{1\text{-}1}, \omega_{6\text{-}1}, \omega_{7\text{-}1}, \omega_{13\text{-}1}, \omega_{15\text{-}1}\}$	$M_{80}=p_1+p_6+3p_7+5p_8+10p_{12}+p_{13}+p_{15}+8p_{20}+p_{22}+3p_{25}$
$\hat{\Omega}_{69}=\{\omega_{2\text{-}1}, \omega_{3\text{-}1}, \omega_{14\text{-}1}\}$	$M_{81}=2p_2+2p_3+6p_8+10p_{12}+p_{14}+p_{18}+p_{19}+9p_{20}+p_{22}+p_{23}+3p_{25}$
$\hat{\Omega}_{70}=\{\omega_{2\text{-}1}, \omega_{3\text{-}1}, \omega_{6\text{-}1}, \omega_{14\text{-}1}\}$	$M_{82}=p_2+2p_3+p_6+6p_8+10p_{12}+p_{14}+p_{18}+p_{19}+9p_{20}+p_{22}+p_{23}+3p_{25}$
$\hat{\Omega}_{71}=\{\omega_{2\text{-}1}, \omega_{3\text{-}1}, \omega_{6\text{-}1}, \omega_{7\text{-}1}, \omega_{14\text{-}1}\}$	$M_{83}=p_2+p_3+p_6+p_7+6p_8+10p_{12}+p_{14}+p_{18}+p_{19}+9p_{20}+p_{22}+p_{23}+3p_{25}$
$\hat{\Omega}_{72}=\{\omega_{2\text{-}1}, \omega_{3\text{-}1}, \omega_{6\text{-}1}, \omega_{7\text{-}1}, \omega_{10\text{-}1}, \omega_{14\text{-}1}\}$	$M_{84}=p_2+p_3+p_6+p_7+6p_8+p_{10}+9p_{12}+p_{14}+p_{18}+p_{19}+9p_{20}+p_{22}+p_{23}+p_{25}$
$\hat{\Omega}_{73}=\{\omega_{2\text{-}1}, \omega_{3\text{-}1}, \omega_{6\text{-}1}, \omega_{10\text{-}1}, \omega_{14\text{-}1}\}$	$M_{85}=p_2+2p_3+p_6+6p_8+p_{10}+9p_{12}+p_{14}+p_{18}+p_{19}+9p_{20}+p_{22}+p_{23}+p_{25}$
$\hat{\Omega}_{74}=\{\omega_{2\text{-}1}, \omega_{3\text{-}1}, \omega_{7\text{-}1}, \omega_{14\text{-}1}\}$	$M_{86}=2p_2+p_3+p_7+6p_8+10p_{12}+p_{14}+p_{18}+p_{19}+9p_{20}+p_{22}+p_{23}+3p_{25}$
$\hat{\Omega}_{75}=\{\omega_{2\text{-}1}, \omega_{3\text{-}1}, \omega_{10\text{-}1}, \omega_{14\text{-}1}\}$	$M_{87}=2p_2+2p_3+6p_8+p_{10}+9p_{12}+p_{14}+p_{18}+p_{19}+9p_{20}+p_{22}+p_{23}+p_{25}$
$\hat{\Omega}_{76}=\{\omega_{2\text{-}1}, \omega_{3\text{-}1}, \omega_{7\text{-}1}, \omega_{10\text{-}1}, \omega_{14\text{-}1}\}$	$M_{88}=2p_2+p_3+p_7+6p_8+p_{10}+9p_{12}+p_{14}+p_{18}+p_{19}+9p_{20}+p_{22}+p_{23}+p_{25}$
$\hat{\Omega}_{77}=\{\omega_{2\text{-}1}, \omega_{7\text{-}1}, \omega_{14\text{-}1}\}$	$M_{89}=2p_2+2p_7+6p_8+10p_{12}+p_{14}+p_{18}+p_{19}+9p_{20}+p_{22}+p_{23}+3p_{25}$
$\hat{\Omega}_{78}=\{\omega_{2\text{-}1}, \omega_{6\text{-}1}, \omega_{7\text{-}1}, \omega_{14\text{-}1}\}$	$M_{90}=p_2+p_6+2p_7+6p_8+10p_{12}+p_{14}+p_{18}+p_{19}+9p_{20}+p_{22}+p_{23}+3p_{25}$
$\hat{\Omega}_{79}=\{\omega_{2\text{-}1}, \omega_{6\text{-}1}, \omega_{7\text{-}1}, \omega_{10\text{-}1}, \omega_{14\text{-}1}\}$	$M_{91}=p_2+p_6+2p_7+6p_8+p_{10}+9p_{12}+p_{14}+p_{18}+p_{19}+9p_{20}+p_{22}+p_{23}+p_{25}$
$\hat{\Omega}_{80}=\{\omega_{2\text{-}1}, \omega_{7\text{-}1}, \omega_{10\text{-}1}, \omega_{14\text{-}1}\}$	$M_{92}=2p_2+2p_7+6p_8+p_{10}+9p_{12}+p_{14}+p_{18}+p_{19}+9p_{20}+p_{22}+p_{23}+p_{25}$
$\hat{\Omega}_{81}=\{\omega_{2\text{-}1}, \omega_{3\text{-}1}, \omega_{13\text{-}1}\}$	$M_{93}=2p_2+3p_3+5p_8+10p_{12}+p_{13}+p_{18}+p_{19}+9p_{20}+p_{22}+3p_{25}$
	$M_{94}=p_2+3p_3+6p_8+10p_{12}+p_{13}+p_{18}+p_{19}+9p_{20}+p_{21}+p_{22}+3p_{25}$

$\hat{\Omega}_{82}=\{\omega_{2\text{-}1}, \omega_{3\text{-}1}, \omega_{6\text{-}1}, \omega_{13\text{-}1}\}$	$M_{95}=p_2+3p_3+p_6+5p_8+10p_{12}+p_{13}+p_{18}+p_{19}+9p_{20}+p_{22}+3p_{25}$
$\hat{\Omega}_{83}=\{\omega_{2\text{-}1}, \omega_{3\text{-}1}, \omega_{6\text{-}1}, \omega_{7\text{-}1}, \omega_{13\text{-}1}\}$	$M_{96}=p_2+2p_3+p_6+p_7+5p_8+10p_{12}+p_{13}+p_{18}+p_{19}+9p_{20}+p_{22}+3p_{25}$
	$M_{97}=p_2+p_3+p_6+2p_7+5p_8+10p_{12}+p_{13}+p_{18}+p_{19}+9p_{20}+p_{22}+3p_{25}$
$\hat{\Omega}_{84}=\{\omega_{2\text{-}1}, \omega_{3\text{-}1}, \omega_{6\text{-}1}, \omega_{7\text{-}1}, \omega_{10\text{-}1}, \omega_{13\text{-}1}\}$	$M_{98}=p_2+2p_3+p_6+p_7+5p_8+p_{10}+9p_{12}+p_{13}+p_{18}+p_{19}+9p_{20}+p_{22}+p_{25}$
	$M_{99}=p_2+p_3+p_6+2p_7+5p_8+p_{10}+9p_{12}+p_{13}+p_{18}+p_{19}+9p_{20}+p_{22}+p_{25}$
$\hat{\Omega}_{85}=\{\omega_{2\text{-}1}, \omega_{3\text{-}1}, \omega_{6\text{-}1}, \omega_{10\text{-}1}, \omega_{13\text{-}1}\}$	$M_{100}=p_2+3p_3+p_6+5p_8+p_{10}+9p_{12}+p_{13}+p_{18}+p_{19}+9p_{20}+p_{22}+p_{25}$
$\hat{\Omega}_{86}=\{\omega_{2\text{-}1}, \omega_{3\text{-}1}, \omega_{10\text{-}1}, \omega_{13\text{-}1}\}$	$M_{101}=2p_2+3p_3+5p_8+p_{10}+9p_{12}+p_{13}+p_{18}+p_{19}+9p_{20}+p_{22}+p_{25}$
	$M_{102}=p_2+3p_3+6p_8+p_{10}+9p_{12}+p_{13}+p_{18}+p_{19}+9p_{20}+p_{21}+p_{22}+p_{25}$
$\hat{\Omega}_{87}=\{\omega_{2\text{-}1}, \omega_{3\text{-}1}, \omega_{7\text{-}1}, \omega_{10\text{-}1}, \omega_{13\text{-}1}\}$	$M_{103}=2p_2+2p_3+p_7+5p_8+p_{10}+9p_{12}+p_{13}+p_{18}+p_{19}+9p_{20}+p_{22}+p_{25}$
	$M_{104}=2p_2+p_3+2p_7+5p_8+p_{10}+9p_{12}+p_{13}+p_{18}+p_{19}+9p_{20}+p_{22}+p_{25}$
	$M_{105}=p_2+2p_3+p_7+6p_8+p_{10}+9p_{12}+p_{13}+p_{18}+p_{19}+9p_{20}+p_{21}+p_{22}+p_{25}$
	$M_{106}=p_2+p_3+2p_7+6p_8+p_{10}+9p_{12}+p_{13}+p_{18}+p_{19}+9p_{20}+p_{21}+p_{22}+p_{25}$
$\hat{\Omega}_{88}=\{\omega_{2\text{-}1}, \omega_{7\text{-}1}, \omega_{13\text{-}1}\}$	$M_{107}=2p_2+3p_7+5p_8+10p_{12}+p_{13}+p_{18}+p_{19}+9p_{20}+p_{22}+3p_{25}$
	$M_{108}=p_2+3p_7+6p_8+10p_{12}+p_{13}+p_{18}+p_{19}+9p_{20}+p_{21}+p_{22}+3p_{25}$
$\hat{\Omega}_{89}=\{\omega_{2\text{-}1}, \omega_{3\text{-}1}, \omega_{7\text{-}1}, \omega_{13\text{-}1}\}$	$M_{109}=2p_2+p_3+2p_7+5p_8+10p_{12}+p_{13}+p_{18}+p_{19}+9p_{20}+p_{22}+3p_{25}$
	$M_{110}=2p_2+2p_3+p_7+5p_8+10p_{12}+p_{13}+p_{18}+p_{19}+9p_{20}+p_{22}+3p_{25}$
	$M_{111}=p_2+p_3+2p_7+6p_8+10p_{12}+p_{13}+p_{18}+p_{19}+9p_{20}+p_{21}+p_{22}+3p_{25}$
	$M_{112}=p_2+2p_3+p_7+6p_8+10p_{12}+p_{13}+p_{18}+p_{19}+9p_{20}+p_{21}+p_{22}+3p_{25}$
$\hat{\Omega}_{90}=\{\omega_{2\text{-}1}, \omega_{6\text{-}1}, \omega_{7\text{-}1}, \omega_{13\text{-}1}\}$	$M_{113}=p_2+p_6+3p_7+5p_8+10p_{12}+p_{13}+p_{18}+p_{19}+9p_{20}+p_{22}+3p_{25}$
$\hat{\Omega}_{91}=\{\omega_{2\text{-}1}, \omega_{6\text{-}1}, \omega_{7\text{-}1}, \omega_{10\text{-}1}, \omega_{13\text{-}1}\}$	$M_{114}=p_2+p_6+3p_7+5p_8+p_{10}+9p_{12}+p_{13}+p_{18}+p_{19}+9p_{20}+p_{22}+p_{25}$
$\hat{\Omega}_{92}=\{\omega_{2\text{-}1}, \omega_{7\text{-}1}, \omega_{10\text{-}1}, \omega_{13\text{-}1}\}$	$M_{115}=2p_2+3p_7+5p_8+p_{10}+9p_{12}+p_{13}+p_{18}+p_{19}+9p_{20}+p_{22}+p_{25}$
	$M_{116}=p_2+3p_7+6p_8+p_{10}+9p_{12}+p_{13}+p_{18}+p_{19}+9p_{20}+p_{21}+p_{22}+p_{25}$
$\hat{\Omega}_{93}=\{\omega_{3\text{-}1}, \omega_{6\text{-}1}, \omega_{14\text{-}1}\}$	$M_{117}=2p_3+2p_6+6p_8+10p_{12}+p_{14}+p_{18}+p_{19}+9p_{20}+p_{22}+p_{23}+3p_{25}$
$\hat{\Omega}_{94}=\{\omega_{3\text{-}1}, \omega_{6\text{-}1}, \omega_{7\text{-}1}, \omega_{14\text{-}1}\}$	$M_{118}=p_3+2p_6+p_7+6p_8+10p_{12}+p_{14}+p_{18}+p_{19}+9p_{20}+p_{22}+p_{23}+3p_{25}$
$\hat{\Omega}_{95}=\{\omega_{3\text{-}1}, \omega_{6\text{-}1}, \omega_{10\text{-}1}, \omega_{14\text{-}1}\}$	$M_{119}=2p_3+2p_6+6p_8+p_{10}+9p_{12}+p_{14}+p_{18}+p_{19}+9p_{20}+p_{22}+p_{23}+p_{25}$
$\hat{\Omega}_{96}=\{\omega_{3\text{-}1}, \omega_{6\text{-}1}, \omega_{7\text{-}1}, \omega_{10\text{-}1}, \omega_{14\text{-}1}\}$	$M_{120}=p_3+2p_6+p_7+6p_8+p_{10}+9p_{12}+p_{14}+p_{18}+p_{19}+9p_{20}+p_{22}+p_{23}+p_{25}$
$\hat{\Omega}_{97}=\{\omega_{6\text{-}1}, \omega_{7\text{-}1}, \omega_{14\text{-}1}\}$	$M_{121}=2p_6+2p_7+6p_8+10p_{12}+p_{14}+p_{18}+p_{19}+9p_{20}+p_{22}+p_{23}+3p_{25}$
$\hat{\Omega}_{98}=\{\omega_{6\text{-}1}, \omega_{7\text{-}1}, \omega_{10\text{-}1}, \omega_{14\text{-}1}\}$	$M_{122}=2p_6+2p_7+6p_8+p_{10}+9p_{12}+p_{14}+p_{18}+p_{19}+9p_{20}+p_{22}+p_{23}+p_{25}$
$\hat{\Omega}_{99}=\{\omega_{3\text{-}1}, \omega_{6\text{-}1}, \omega_{13\text{-}1}\}$	$M_{123}=3p_3+2p_6+5p_8+10p_{12}+p_{13}+p_{18}+p_{19}+9p_{20}+p_{22}+3p_{25}$
	$M_{124}=3p_3+p_6+6p_8+10p_{12}+p_{13}+p_{18}+p_{19}+9p_{20}+p_{21}+p_{22}+3p_{25}$
$\hat{\Omega}_{100}=\{\omega_{3\text{-}1}, \omega_{6\text{-}1}, \omega_{7\text{-}1}, \omega_{13\text{-}1}\}$	$M_{125}=2p_3+2p_6+p_7+5p_8+10p_{12}+p_{13}+p_{18}+p_{19}+9p_{20}+p_{22}+3p_{25}$
	$M_{126}=p_3+2p_6+2p_7+5p_8+10p_{12}+p_{13}+p_{18}+p_{19}+9p_{20}+p_{22}+3p_{25}$
	$M_{127}=2p_3+p_6+p_7+6p_8+10p_{12}+p_{13}+p_{18}+p_{19}+9p_{20}+p_{21}+p_{22}+3p_{25}$
	$M_{128}=p_3+p_6+2p_7+6p_8+10p_{12}+p_{13}+p_{18}+p_{19}+9p_{20}+p_{21}+p_{22}+3p_{25}$
$\hat{\Omega}_{101}=\{\omega_{3\text{-}1}, \omega_{6\text{-}1}, \omega_{7\text{-}1}, \omega_{10\text{-}1}, \omega_{13\text{-}1}\}$	$M_{129}=2p_3+2p_6+p_7+5p_8+p_{10}+9p_{12}+p_{13}+p_{18}+p_{19}+9p_{20}+p_{22}+p_{25}$
	$M_{130}=p_3+2p_6+2p_7+5p_8+p_{10}+9p_{12}+p_{13}+p_{18}+p_{19}+9p_{20}+p_{22}+p_{25}$
	$M_{131}=2p_3+p_6+p_7+6p_8+p_{10}+9p_{12}+p_{13}+p_{18}+p_{19}+9p_{20}+p_{21}+p_{22}+p_{25}$
	$M_{132}=p_3+p_6+2p_7+6p_8+p_{10}+9p_{12}+p_{13}+p_{18}+p_{19}+9p_{20}+p_{21}+p_{22}+p_{25}$
$\hat{\Omega}_{102}=\{\omega_{3\text{-}1}, \omega_{6\text{-}1}, \omega_{10\text{-}1}, \omega_{13\text{-}1}\}$	$M_{133}=3p_3+2p_6+5p_8+p_{10}+9p_{12}+p_{13}+p_{18}+p_{19}+9p_{20}+p_{22}+p_{25}$
	$M_{134}=3p_3+p_6+6p_8+p_{10}+9p_{12}+p_{13}+p_{18}+p_{19}+9p_{20}+p_{21}+p_{22}+p_{25}$
$\hat{\Omega}_{103}=\{\omega_{6\text{-}1}, \omega_{7\text{-}1}, \omega_{13\text{-}1}\}$	$M_{135}=2p_6+3p_7+5p_8+10p_{12}+p_{13}+p_{18}+p_{19}+9p_{20}+p_{22}+3p_{25}$
	$M_{136}=p_6+3p_7+6p_8+10p_{12}+p_{13}+p_{18}+p_{19}+9p_{20}+p_{21}+p_{22}+3p_{25}$
$\hat{\Omega}_{104}=\{\omega_{6\text{-}1}, \omega_{7\text{-}1}, \omega_{10\text{-}1}, \omega_{13\text{-}1}\}$	$M_{137}=2p_6+3p_7+5p_8+p_{10}+9p_{12}+p_{13}+p_{18}+p_{19}+9p_{20}+p_{22}+p_{25}$
	$M_{138}=p_6+3p_7+6p_8+p_{10}+9p_{12}+p_{13}+p_{18}+p_{19}+9p_{20}+p_{21}+p_{22}+p_{25}$
$\hat{\Omega}_{105}=\{\omega_{3\text{-}1}, \omega_{13\text{-}1}\}$	$M_{139}=3p_3+7p_8+10p_{12}+p_{13}+p_{18}+p_{19}+9p_{20}+2p_{21}+p_{22}+3p_{25}$
$\hat{\Omega}_{106}=\{\omega_{3\text{-}1}, \omega_{7\text{-}1}, \omega_{13\text{-}1}\}$	$M_{140}=2p_3+p_7+7p_8+10p_{12}+p_{13}+p_{18}+p_{19}+9p_{20}+2p_{21}+p_{22}+3p_{25}$
	$M_{141}=p_3+2p_7+7p_8+10p_{12}+p_{13}+p_{18}+p_{19}+9p_{20}+2p_{21}+p_{22}+3p_{25}$
$\hat{\Omega}_{107}=\{\omega_{3\text{-}1}, \omega_{7\text{-}1}, \omega_{10\text{-}1}, \omega_{13\text{-}1}\}$	$M_{142}=2p_3+p_7+7p_8+p_{10}+9p_{12}+p_{13}+p_{18}+p_{19}+9p_{20}+2p_{21}+p_{22}+p_{25}$
	$M_{143}=p_3+2p_7+7p_8+p_{10}+9p_{12}+p_{13}+p_{18}+p_{19}+9p_{20}+2p_{21}+p_{22}+p_{25}$
$\hat{\Omega}_{108}=\{\omega_{3\text{-}1}, \omega_{10\text{-}1}, \omega_{13\text{-}1}\}$	$M_{144}=3p_3+7p_8+p_{10}+9p_{12}+p_{13}+p_{18}+p_{19}+9p_{20}+2p_{21}+p_{22}+p_{25}$
$\hat{\Omega}_{109}=\{\omega_{7\text{-}1}, \omega_{13\text{-}1}\}$	$M_{145}=3p_7+7p_8+10p_{12}+p_{13}+p_{18}+p_{19}+9p_{20}+2p_{21}+p_{22}+3p_{25}$
$\hat{\Omega}_{110}=\{\omega_{7\text{-}1}, \omega_{10\text{-}1}, \omega_{13\text{-}1}\}$	$M_{146}=3p_7+7p_8+p_{10}+9p_{12}+p_{13}+p_{18}+p_{19}+9p_{20}+2p_{21}+p_{22}+p_{25}$

S.VI. Experimental Comparison

To evaluate the performance of the proposed method, we conduct comparative experiments against the RG-based method. The operating environment of the experiment is MATLAB R2024b running on Windows 11 with a 2.5 GHz processor, Core (TM) i3-13100T, and 8 GB memory, where we utilize MATLAB's built-in *intlinprog* function to solve (9). The results, summarized in Table SII, demonstrate the scalability advantage of our approach. Specifically, for the PN in Fig. 5 with 9,378 reachable markings, constructing and analyzing the full RG is feasible, costing 0.41s. This indicates that for models with a relatively small state space, traditional exhaustive methods remain feasible. However, as the state space expands, the advantage of our method becomes evident. For the PNs in Figs. S1 and S2 in Supplementary File, which have hundreds of millions of reachable markings, the RG construction approach fails due to memory overflow. In contrast, our method successfully identifies partial deadlocks within 20.39s and 3482.43s, respectively. This demonstrates its superior capability in handling large-scale systems. Notice that the running time of our method increases with the size of the DZ. For instance, although the number of reachable markings in Fig. S1 is larger than that in Fig. S2, the DZ in Fig. S1 constitutes only about 1.34% of the entire state space, compared to 40.86% in Fig. S2. Hence, the running time for Fig. S1 is significantly shorter.

S.VII. Case Study of Partial Deadlock Control

The reachability graph of an S^4PR is divided into two regions: a live-zone (LZ) and a deadlock-zone (DZ). The DZ includes all illegal markings, and the LZ contains all legal markings. A first-met bad marking (FBM) is a marking in the DZ that represents the first entry from the LZ to the DZ. Once all FBMs are forbidden, the controlled system remains live, as it can no longer enter the DZ. Below, an example is given to ilustrate the application of the detected partial deadlocks towards deadlock control.

For the S^4PR in Fig. S3, there are 146 reachable markings from the initial marking $M_0=9p_1+9p_6+4r_1+3r_2+r_3$, where there are four partial deadlocks as $M_{69}=13p_1+14p_6+2p_4+p_7+3r_1+2r_2+3r_3$, $M_{76}=13p_1+13p_6+2p_4+2p7+3r_1+2r_2+r_3$, $M_{80}=12p_1+14p_6+3p_4+p_7+3r_1+3r_3$, and $M_{82}=12p_1+13p_6+3p_4+2p_7+3r_1+r_3$. Conventional methods for identifying illegal markings and dangerous markings typically require traversing the entire reachability graph, as shown in Fig. S4, where the red-colored and blue-colored markings represent illegal ones, and the orange-colored markings indicate dangerous ones. Here, a dangerous marking is defined as a marking in the LZ that can reach an FBM by firing one transition. If we instead perform a backward traversal starting from the obtained partial deadlocks, the resulting local reachability graph (Fig. S5) contains

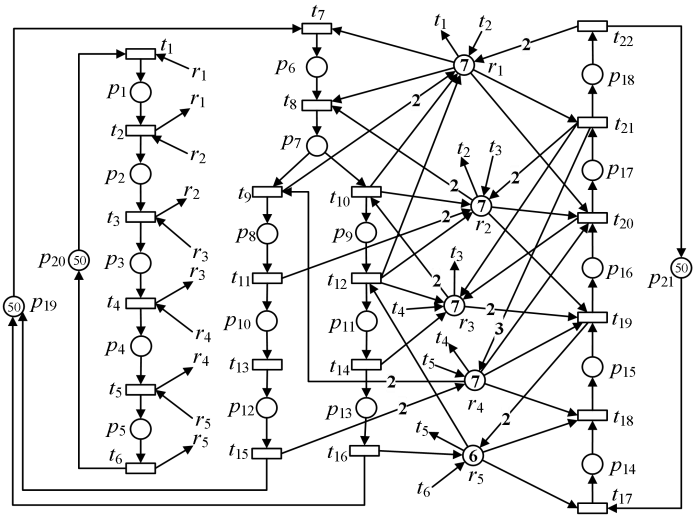

Fig. S1. PN with 170,312,521 reachable markings.

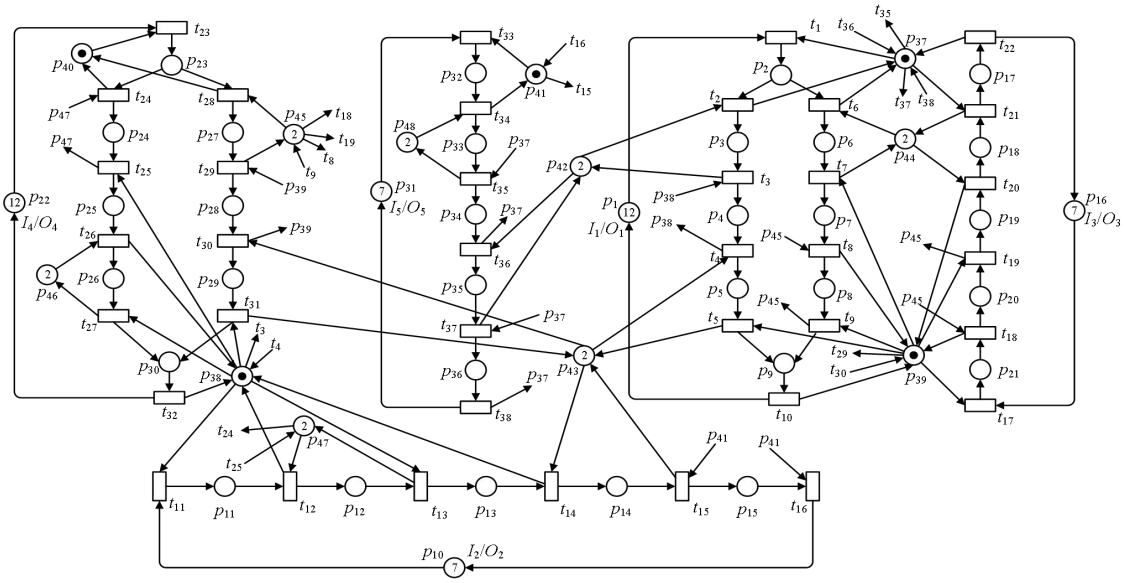

Fig. S2. PN with 142,865,280 reachable markings.

TABLE SII
PERFORMANCE COMPARISON OF PARTIAL DEADLOCK DETECTION FOR THREE PNS

PNs	$\|R(M_0)\|$	|LZ|	|DZ|	$\|DZ\|/\|R(M_0)\|$	Running time	
					RG-based method	This work
Fig. 5	9,378	8832	546	5.82%	0.41s	0.35s
Fig. S1	170,312,521	168,026,565	2,285,956	1.34%	×	20.39s
Fig. S2	142,865,280	84,489,428	58,375,852	40.86%	×	3482.43s

×: Memory Overflow

only 43 markings, including 15 dangerous markings and 13 FBMs. Notice that the analysis is dramatically streamlined: the number of markings that need to be examined is reduced from 146 to just 43, a reduction of approximately 71%. Based on the obtained dangerous markings and their corresponding dangerous transitions, an online controller can be designed to guide the system operation by disabling only the dangerous transitions at those dangerous markings, thereby avoiding deadlocks while preserving maximum permissive behavior. Furthermore, using deadlock prevention strategies, we can design necessary constraints based on the obtained 13 FBMs to prevent their occurrence only, thereby deriving supervisors with maximum permissiveness and minimal structural complexity.

For a system to be live, it is necessary that no reachable marking contains a dead transition. The following theorem is given to show that using the partial deadlocks detected by our proposed method as a foundation, a live controlled Petri net model can indeed be obtained in the subsequent control synthesis phase. In the following, a bad marking refers to an illegal state that inevitably leads to a partial deadlock.

Theorem S1: If transition t is dead at M, then M must be either a partial deadlock or bad marking.

Proof: A transition t is dead at M if there exists no marking $M' \in R(M)$ such that t is enabled at M'. Now, suppose that t is dead at M. If M is neither a partial deadlock nor a bad marking, according to the definition of partial deadlock, $\exists p \in P_M$ and $\exists t' \in p^{\bullet}$ such that t' is enabled at $M' \in R(M)$. If $\forall p' \in P_M$ and $\forall t'' \in p'^{\bullet}$ such that t'' is not enabled at M, then only the output transitions of an idle place can be fired, which will further reduce the amount of idle resources in the system, i.e., $\forall M'' \in R(M)$ and $\forall r \in P_R$: $M''(r) \leq M(r)$. Notice that the idle resource at M is insufficient to enable t''. Hence, at any subsequent marking $M'' \in R(M)$, the number of tokens in resource places remains insufficient to enable t''. This implies that t'' can never be enabled at $\forall M'' \in R(M)$. This contradicts that $\exists p \in P_M$ and $\exists t' \in p^{\bullet}$ such that t' is enabled at $M' \in R(M)$. Hence, t' is enabled at M, and the resulting marking by firing t' is neither a partial deadlock nor a bad marking. By repeating this analysis on each newly generated marking, we can ultimately conclude that all tokens in activity places at M can be returned to idle places, i.e., $M_0 \in R(M)$. If there are dead transitions at the initial marking, it cannot be solved merely by adding behavior-constrained controllers. Hence, without loss of generality, we assume that any transition is not dead at the initial marking. Thus, $\exists M_i \in R(M_0)$: $M_i[t\rangle$. Since $M_0 \in R(M)$, we have that $\exists M_i \in R(M)$: $M_i[t\rangle$. This contradicts that t is dead at M. Hence, if t is dead at M, M must be a partial deadlock or a bad marking. ■

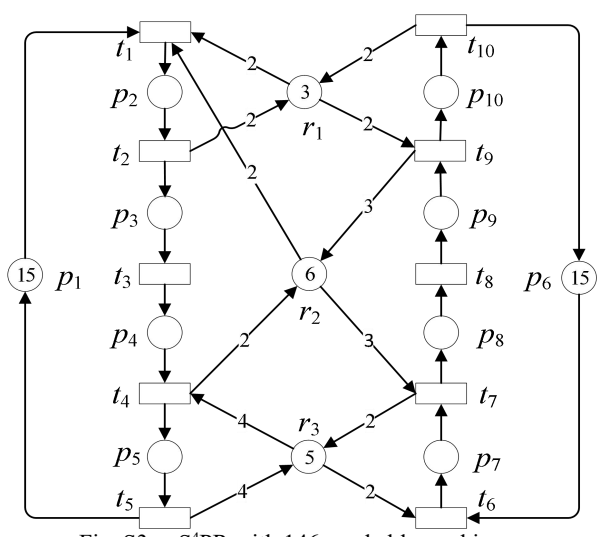

Fig. S3. S^4PR with 146 reachable markings.

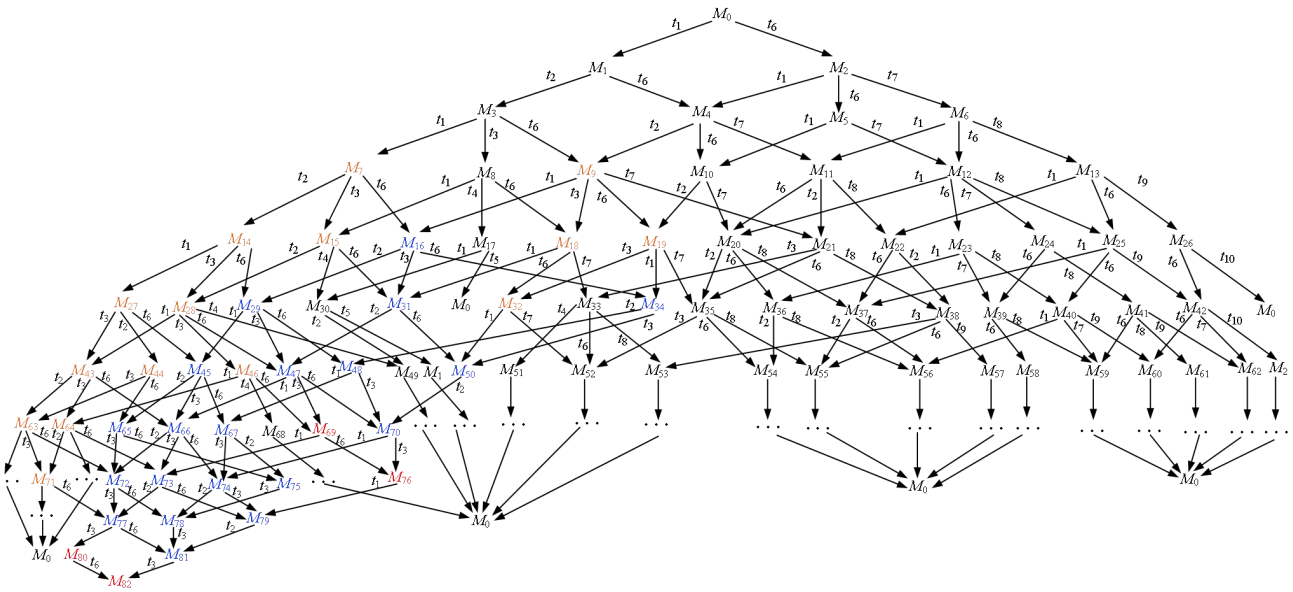

Fig. S4. Reachability graph of S^{4}PR in Fig. S3.

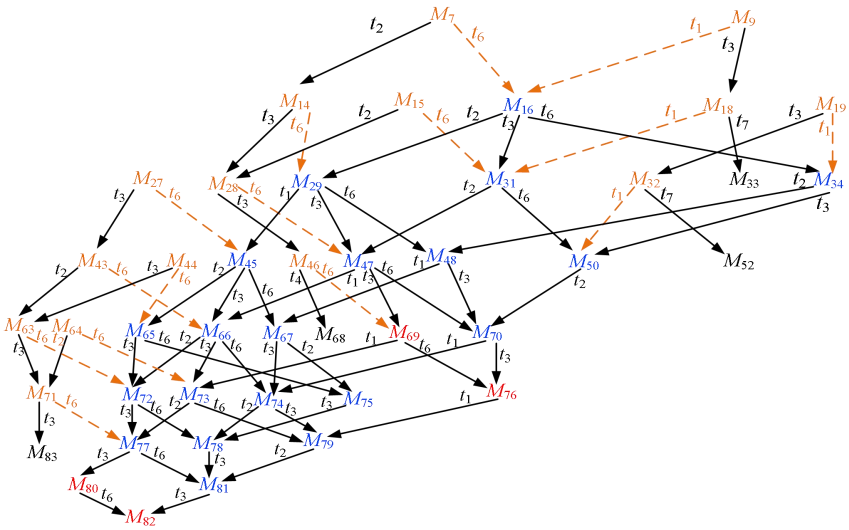

Fig. S5. A local reachability graph of S4PR in Fig. S3, where dashed arcs represent that transition firing leads to an illegal marking.